LEBANESE AMERICAN UNIVERSITY

A Dual Vibration Absorber for Vibration Suppression of Harmonically Forced Systems

By

Elie El Khoury

A Thesis Submitted in the Partial Fulfillment of the Requirements for the Degree of Master of Science in Mechanical Engineering

School of Engineering

July 2022

LAU
الجامعة اللبنانية الأميركية
Lebanese American University

THESIS APPROVAL FORM

Student Name: Elie El Khoury I.D. #: 201406506

Thesis Title : A Dual Vibration Absorber for Vibration Suppression of Harmonically Forced Systems

Program: Mechanical Engineering

Department: Industrial and Mechanical Engineering

School: Engineering

The undersigned certify that they have examined the final electronic copy of this thesis and approved it in Partial Fulfillment of the requirements for the degree of:

Master of Science in the major of Mechanical Engineering

Thesis Advisor's Name	Jimmy Issa	Signature [redacted] Digitally signed by Jimmy Issa DN: cn=Jimmy Issa, o=Lebanese American University, ou=Industrial and Mechanical Engineering, email=jimmy.issa@lau.edu.lb, c=LB Date: 2022.07.19 16:38:03 00'	DATE: 19 / 07 / 2022 (Day / Month / Year)
Committee Member's Name	Amne El Cheikh	Signature [redacted] Digitally signed by Amne El Cheikh DN: cn=Amne El Cheikh, o=LAU, ou, email=amne.elcheikh@lau.edu.lb, c=LB Date: 2022.07.19 1 :21: 5 03'00'	DATE: 19 / 07 / 2022 (Day / Month / Year)
Committee Member's Name	Michel Khoury	Signature [redacted] Digitally signed by Michel Khoury DN: cn=Michel Khoury, o=LAU, ou, email=mkhoury@lau.edu.lb, c=LB Date: 2022.07.21 12:07:52 03'00'	DATE: 19 / 07 / 2022 (Day / Month / Year)

LAU
الجامعة اللبنانية الأميركية
Lebanese American University

THESIS COPYRIGHT RELEASE FORM

LEBANESE AMERICAN UNIVERSITY NON-EXCLUSIVE DISTRIBUTION LICENSE

By signing and submitting this license, you (the author(s) or copyright owner) grants the Lebanese American University (LAU) the non-exclusive right to reproduce, translate (as defined below), and/or distribute your submission (including the abstract) worldwide in print and electronic formats and in any medium, including but not limited to audio or video. You agree that LAU may, without changing the content, translate the submission to any medium or format for the purpose of preservation. You also agree that LAU may keep more than one copy of this submission for purposes of security, backup and preservation. You represent that the submission is your original work, and that you have the right to grant the rights contained in this license. You also represent that your submission does not, to the best of your knowledge, infringe upon anyone's copyright. If the submission contains material for which you do not hold copyright, you represent that you have obtained the unrestricted permission of the copyright owner to grant LAU the rights required by this license, and that such third-party owned material is clearly identified and acknowledged within the text or content of the submission. IF THE SUBMISSION IS BASED UPON WORK THAT HAS BEEN SPONSORED OR SUPPORTED BY AN AGENCY OR ORGANIZATION OTHER THAN LAU, YOU REPRESENT THAT YOU HAVE FULFILLED ANY RIGHT OF REVIEW OR OTHER OBLIGATIONS REQUIRED BY SUCH CONTRACT OR AGREEMENT. LAU will clearly identify your name(s) as the author(s) or owner(s) of the submission, and will not make any alteration, other than as allowed by this license, to your submission.

Name: Elie Elkhoury

Signature: [redacted]

Date: 21 / 07 / 2022
Day Month Year

LAU
الجامعة اللبنانية الأميركية
Lebanese American University

PLAGIARISM POLICY COMPLIANCE STATEMENT

I certify that:

1. I have read and understood LAU's Plagiarism Policy.
2. I understand that failure to comply with this Policy can lead to academic and disciplinary actions against me.
3. This work is substantially my own, and to the extent that any part of this work is not my own I have indicated that by acknowledging its sources.

Name: Elie Elkhoury

Signature: [redacted]

Date: 21 / 07 / 2022
Day Month Year

ACKNOWLEDGMENT

This project would not have been possible without the Graduate Studies and Research Office who provided me with a Graduate Program Scholarship (GPS) that enabled me to conduct this research. Moreover, thanks to my committee members Dr. Amne El Cheikh and Dr. Michel Khoury for their continuous support. Lastly, many thanks to my advisor Dr. Jimmy Issa, who provided me with guidance during the past two years and helped by correcting my numerous versions of this thesis.

A Dual Vibration Absorber for Vibration Suppression in Harmonically Forced Systems

Elie El Khoury

ABSTRACT

In this work, a dual absorber setup is proposed for the reduction of the harmonic response of single degree of freedom systems. The main system is a mass spring damper excited with a harmonic force. This dual absorber setup combines both the classical and platform absorbers. The primary system sits of the platform absorber and has the classical absorber attached to it. This yields a harmonically forced three degrees of freedom system. The objective is to reduce the maximum of the frequency response function of the primary system for all forcing frequencies. First, the objective function is defined and written in terms of dimensionless parameters. Then, a numerical technique based on both the genetic algorithm and the search simplex method is used to calculate the optimal system parameters. The problem is solved for a set of values of primary system damping and upper absorber mass. It is shown that the dual absorber performance increases with the increasing of the upper absorber mass for a given platform mass. And, as in the case of the platform absorber, an optimal absorber mass exists for the lower absorber. Finally, the performance of the dual absorber is compared to those of the classical and platform absorbers. It is shown that the dual absorber outperforms both the classical and platform absorbers.

Keywords: Absorbers, Vibration Absorbers, Vibration Suppression, Vibration Control, Passive Control.

TABLE OF CONTENTS

LIST OF FIGURES

LIST OF TABLES

LIST OF SYMBOLS

Symbol	Definition
m_1	Primary System Mass
m_2	Classical Absorber Mass
m_3	Platform Absorber Mass
$\mu_2 = m_2/m_1$	Mass Ratio of the Classical Absorber to the Primary System
$\mu_3 = m_3/m_1$	Mass Ratio of the Platform Absorber to the Primary System
k_1	Stiffness of the Primary System Spring
k_2	Stiffness of Classical Absorber Spring
k_3	Stiffness of the Platform Absorber Spring
$\lambda_2 = k_2/k_1$	Stiffness Ratio of the Classical Absorber to the Primary System
$\lambda_3 = k_3/k_1$	Stiffness Ratio of the Platform Absorber to the Primary System
c_1	Damping Coefficient of the Primary System Damper
c_2	Damping Coefficient of the Classical Absorber Damper
c_3	Damping Coefficient of the Platform Absorber Damper
$\zeta_1 = c_1/2\sqrt{m_1 k_1}$	Damping Ratio of the Primary System
$\zeta_2 = c_2/2\sqrt{m_1 k_1}$	Damping Ratio of the Classical Absorber
$\zeta_3 = c_3/2\sqrt{m_1 k_1}$	Damping Ratio of the Platform Absorber
x_1	Primary System Displacement
x_2	Classical Absorber Displacement
x_3	Platform Absorber Displacement
X_1	Steady State Complex Amplitude of the Primary System
X_2	Steady State Complex Amplitude of the Classical Absorber
X_3	Steady State Complex Amplitude of the Platform Absorber
A_{X_1}	Steady State Amplitude of the Primary System
A_{X_2}	Steady State Amplitude of the Classical Absorber
A_{X_3}	Steady State Amplitude of the Platform Absorber
f_0	Amplitude of the Excitation Force
ω	Excitation Frequency
ω_n	Natural Frequency of the Primary System
$r = \omega/\omega_n$	Frequency Ratio

Chapter One

Introduction

Moving parts in any machine result in harmonic forces which get transmitted to and excite other surrounding mechanical systems and put them to motion. This motion type, i.e. vibration, is unfavorable, as it can lead to a reduced efficiency, an increase in noise pollution, or sometimes even to a complete failure of the mechanical system. Therefore, many vibration suppression techniques have been developed throughout the years, with the aim to overcome this problem. These techniques can be classified into three categories, namely, passive, semi-active, or active. The most common passive type of such techniques is the vibration absorber, also known as the tuned mass damper. It is a device that will be attached to a vibrating structure or machine and tuned to reduce the primary system motion. This is achieved as the absorber applies mechanical forces to counteract the externally applied forces which are responsible for exciting the system and putting it to motion. In its most simplified form, it consists of a small mass attached to the vibrating machine using a resilient element, such as a mechanical spring or damper. Such a device was first patented by Frahm in 1911 (United States Patent No. 989958A, 1911).

Since the invention of the concept of the vibration absorber, extensive research work has been carried out in order to get better optimized designs. The first analytical study of the vibration absorber was conducted by (Ormondroyd & Den

Hartog, 1928). The optimal parameters for the vibration absorber coupled to an undamped system were obtained using the fixed points method. These are two points in the frequency response function that are independent of the absorber damping. It is first found that a trade-off exists between these points as the spring of the absorber is varied. Hence, the optimal stiffness is first obtained by putting the two points on the same level. The optimal absorber damping is calculated as the average of two values each corresponding to having the frequency response function pass horizontally through one of the fixed points (Den Hartog, Mechanical Vibrations, 1940). (Brock, 1946) used a perturbation technique to determine the absorber damping analytically. This solution is an approximate analytical solution which was proven to be very accurate.

This theory is well known and can be found in vibration textbooks such as (Den Hartog, Mechanical Vibrations, 1985) and (Rao, 2003). In a recent work (Nishihara & Asami, 2002), the exact analytical solution of the optimal absorber parameters is obtained by forcing the two peaks of the frequency response function to be at the same level while minimizing this dual peak. It is shown that the exact solution closely matches the approximate one. The approximate optimal parameters of a vibration absorber attached to the primary system using a rubberlike material was determined by (Snowdon, 1959). The fixed points method was generalized to a multi-degree of freedom system by (Ozer & Royston, 2005).

When damping is present in the primary system, the frequency response function will no longer exhibit fixed points independent of absorber damping, and hence, the fixed points method is no longer applicable. Moreover, the complexity of the

objective function of such a system with primary system damping prevents the determination of an analytical exact optimal solution of the said function, except when hysterical damping is found in both the absorber and the primary system (Asami & Nishihara, Closed-Form Exact Solution to H∞ Optimization of Dynamic Vibration Absorbers (Application to Different Transfer Functions and Damping Systems), 2003). A perturbation method was used to find an approximate analytical solution for a viscously damped primary structure (Asami, Nishihara, & Baz, Analytical Soluations to H∞ and H2 Optimization of Dynamic Vibration Absorbers Attached to Damped Linear Systems, 2002). As for a system with a Lanchester damper, the closed form optimal parameters were found (Bapat & Kumaraswamy, 1979). In other studies, the optimal absorber designs for systems with viscoelastic vibration absorbers were proposed (de Espíndola, Cruz, de Oliveira Lopes, & Bavastri , 2008) (Doubrawa Filho, Luersen, & Bavastri, 2011). Nonlinear vibration absorbers were studied by (Oueini & Nayfeh, 2000) and (Ashour & Nayfeh, 2003). As for the other cases of damping, numerous studies used numerical methods to calculate the optimal parameters for the system within a range of mass and damping ratios, and then a graphical presentation of the findings were given (Thompson, 1981) (Randall, Halsted, & Taylor, 1981) (Soom & Lee, 1983) (Pennestri, 1998). Absorbers with multiple degrees of freedom were proposed and investigated (Febbo & Vera, Optimization of a Two Degree of Freedom System Acting as a Dynamic Vibration Absorber, 2008) (Febbo, Optimal Parameters and Characteristics of a Three Degree of Freedom Dynamic Vibration Absorber, 2012).

In 2011, a new vibration absorber setup was proposed, wherein the primary system and the absorber's positions are interchanged, and was used for ground

isolation (Issa, Ground Motion Isolation Using a Newly Designed Vibration Absorber, 2011). The absorber now is in the form a platform connected to the ground by a resilient element and the primary system sits on the latter. It is shown that in this case, the absorber reaches its utmost performance at a given mass ratio, unlike the classical setup where the absorber performance increases with the increasing of the absorber mass. Hence, an optimal mass ratio exists for this newly proposed configuration. This setup is optimized to reduce the vibrations in: harmonically forced undamped primary systems (Issa, Optimal Design of a Damped Single Degree of Freedom Platform for Vibration Suppression in Harmonically Forced Undamped Systems, 2013) and damped systems (Harik & Issa, 2015). When the system is subjected to random white noise excitation, the optimal parameters were obtained numerically except for the utmost optimal solution which was obtained analytically (Issa, Reduction of the Transient Vibration of Systems Using the Classical and Modified Vibration Absorber Setup, 2014).

The classical vibration absorber setup is shown in **Figure 1–1(a)**, while the platform vibration absorber setup is shown in **Figure 1–1(b)**. In this work, both setups are combined as shown in **Figure 1–1(c)**, the primary system is now sitting on the platform and has a classical absorber attached to it. All resilient connections between the masses are assumed to be linear and consist of a linear spring and damper in parallel. This new design will be referred to as the dual vibration absorber. This work aims to find the optimal parameters for the dual vibration absorber when the primary system is harmonically forced.

In 0, the case of the classical vibration absorber setup is reconsidered, and the optimal parameters are obtained numerically. The numerical optimization method is based on the genetic algorithm and another numerical search technique based on the simplex method. In 0, the platform vibration absorber setup is considered and its optimal parameters are obtained using the same techniques used in case of the classical absorber setup. The dual absorber is considered in 0. The objective function, which is the amplitude of the steady state response function, is first obtained. Then the optimal absorber parameters are calculated numerically using the same numerical approach as in the previous cases. In 0, comparison between the different setups is given. Finally, concluding remarks and directions for potential additional research are given in 0.

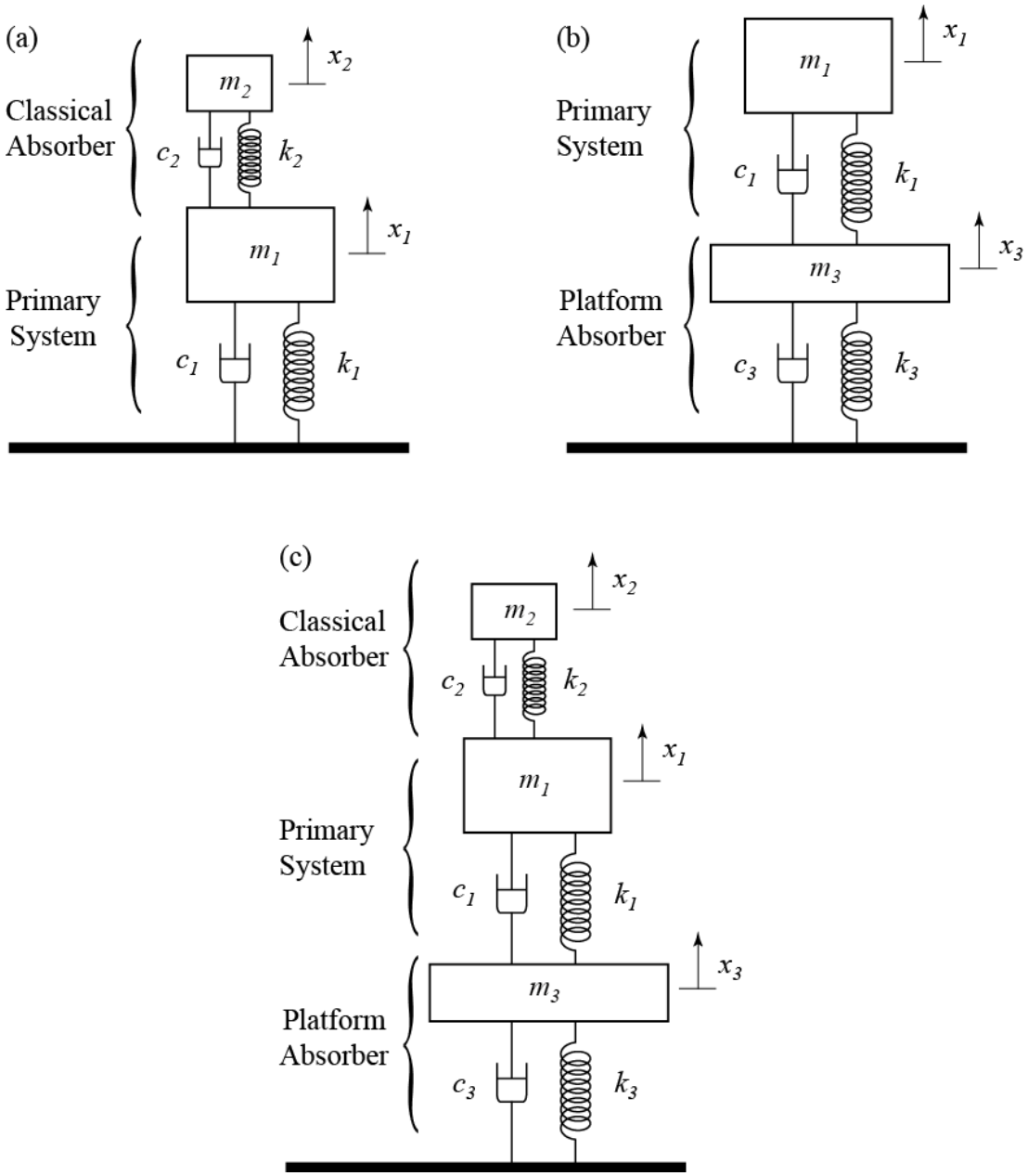

Figure 1–1. (a) Classical Vibration Absorber Setup, (b) Platform Vibration Absorber Setup, and (c) Dual Vibration Absorber Setup

Chapter Two

Classical Vibration Absorber

2-1. Equation of Motion

The classical linear vibration absorber is a linear single degree of freedom dynamic system. It comprises of a lumped mass with a linear spring and damper. In this study, the primary system is a linear damped single degree of freedom system. The classical setup is shown in **Figure 2–1**, and the primary system is subjected to a harmonic force. The equations of motion of this system are given as:

$$\begin{aligned} m_1\ddot{x}_1 + c_1\dot{x}_1 + c_2(\dot{x}_1 - \dot{x}_2) + k_1x_1 + k_2(x_1 - x_2) &= f_0\, sin(\omega t) \\ m_2\ddot{x}_2 + c_2(\dot{x}_2 - \dot{x}_1) + k_2(x_2 - x_1) &= 0 \end{aligned} \tag{1}$$

Where $(\dot{\ })$ and $(\ddot{\ })$ denote, respectively, the first and second derivatives of ( ) with respect to time.

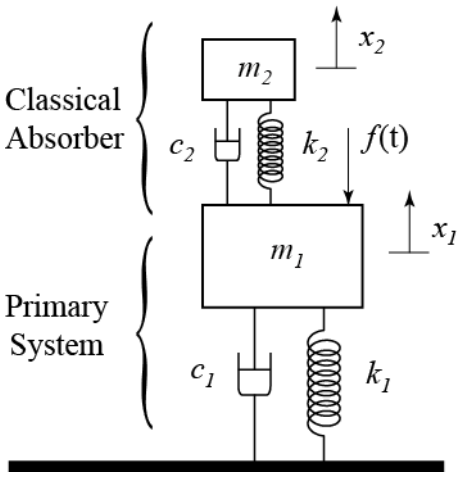

Figure 2–1. The Classical Vibration Absorber Setup

2-2. Frequency Response Function

The steady state complex frequency response functions of both the primary system and the absorber are determined and take the forms:

$$X_1 = -\frac{f_0(k_2 - m_2\omega^2 + \mathbf{i}c_2\omega)}{\alpha_{TMD}}$$
$$X_2 = -\frac{f_0(k_2 + \mathbf{i}c_2\omega)}{\alpha_{TMD}} \tag{2}$$

Where

$$\alpha_{TMD} = (k_2 + \mathbf{i}c_2\omega)^2 - (k_2 - m_2\omega^2 + \mathbf{i}c_2\omega)\big(k_2 + k_1 - m_2\omega^2 + \mathbf{i}\omega(c_1 + c_2)\big)$$

and **i** denotes the imaginary unit number. Each dimensionless parameter introduced in the List of Symbols is chosen in a way that it only depends on one variable. This way, a change in one of the dimensionless parameters is directly linked to one of the decision variables instead a combination of two or more. For instance, an increase in the absorber damping ratio ζ_2 is directly linked to an increase in viscous-damping coefficient of the absorber c_2. In dimensionless form, the steady state system displacements given in Eq.(2) can now be written as:

$$\frac{k_1X_1}{f_0} = \frac{\lambda_2 - r^2\mu_2 + 2\mathbf{i}r\zeta_2}{\beta_{TMD}}$$
$$\frac{k_1X_2}{f_0} = \frac{\lambda_2 + 2\mathbf{i}r\zeta_2}{\beta_{TMD}} \tag{3}$$

Where

$$\beta_{TMD} = \lambda_2 - r^2(4\zeta_2\zeta_1 + \lambda_2 + \mu_2 + \lambda_2\mu_2) + r^4\mu_2 + 2\mathbf{i}r(\zeta_2 + \zeta_1\lambda_2)$$
$$- 2\mathbf{i}r^3(\zeta_2 + (\zeta_2 + \zeta_1)\mu_2)$$

The dimensionless steady state amplitudes of the primary system and absorber are norms of those given in Eq.(3) and take the forms below:

$$A_{X_1} = \sqrt{\frac{{a_3}^2 + {a_4}^2}{{a_1}^2 + {a_2}^2}} \qquad A_{X_2} = \sqrt{\frac{{a_5}^2 + {a_6}^2}{{a_1}^2 + {a_2}^2}} \tag{4}$$

Where

$$a_1 = r^4\mu_2 - r^2(4\zeta_1\zeta_2 + \lambda_2\mu_2 + \lambda_2 + \mu_2) + \lambda_2$$

$$a_2 = -2r\left(\zeta_2\left((\mu_2 + 1)r^2 - 1\right) + \zeta_1(r^2\mu_2 - \lambda_2)\right)$$

$$a_3 = \lambda_2 - r^2\mu_2$$

$$a_4 = 2r\zeta_2$$

$$a_5 = \lambda_2$$

$$a_6 = 2r\zeta_2$$

In this system, the mass m_1, spring stiffness k_1, and viscous-damping coefficient c_1 of the primary system are known, thus the primary system damping ratio ζ_1 is known. The optimization problem is solved as follows: for a given absorber mass m_2, its optimal viscous-damping coefficient c_2, and spring stiffness k_2 are calculated in order to minimize the maximum of the primary system's frequency response function. In other words, for a given ζ_1 and μ_2, the optimal damping ratio ζ_2 and stiffness ratio λ_2 are calculated to minimize the maximum of A_{X_1} for all r. The frequency response function $A_{X_1}$is shown in **Figure 2–2** for $\mu_2 = 0.05$ and $\zeta_1 = 0.1$. Three different cases are shown corresponding to three different sets of ζ_2 and λ_2. As expected, **Figure 2–2** shows that the A_{X_1} exhibits two peaks

with all curves passing through 1 for zero frequency. In these problems, it is imperative that the behavior of the objective function is well understood in order to be able to simplify the optimization problem. In the following section, the optimization procedure used to calculate the optimal system parameters is introduced.

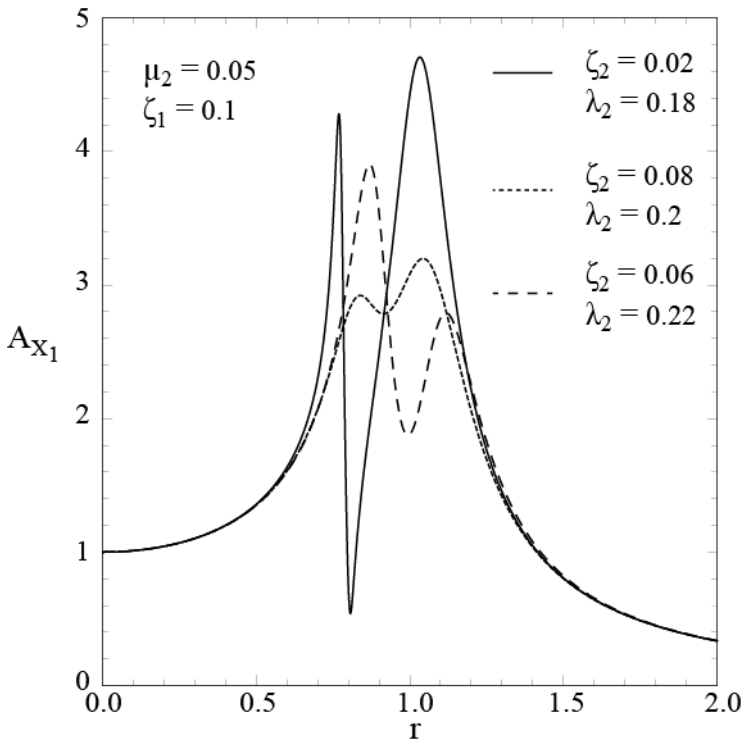

Figure 2–2. Plots of A_{X_1} for $\mu_2 = 0.05$ and $\zeta_1 = 0.1$

2-3. Optimization Procedure

The objective is to find the optimal dimensionless absorber parameters, namely the optimal stiffness ratio $\lambda_{2_{opt}}$ and the optimal damping ratio $\zeta_{2_{opt}}$, that minimize the maximum of the steady state frequency response function of the primary system A_{X_1} at all forcing frequencies ω. In this problem, all the primary system parameters

are known and the latter is solved for a given absorber mass, hence μ_2 and ζ_1 are known variables. This is a minimax problem where the maximum of a function is to be minimized. The objective function can now be written as $G_{(\mu_2,\zeta_1)} = \max_r A_{X_1}$. Finally, the decision variables are λ_2 and ζ_2 and hence the optimization problem reads: find (λ_2, ζ_2) that will minimize $G_{(\mu_2,\zeta_1)}$.

This problem cannot be solved analytically except in the case of the undamped primary system. However, this is not the aim here and the analytical solution is well-know. The problem is solved numerically using a combination of genetic algorithms and a numerical search technique based on the simplex method. The genetic algorithm method is an optimization method used to solve a constrained or unconstrained problem by a process similar to biological evolution. In fact, it starts from a generation, which is a set of possible solutions, and evaluates the objective function at each possible solution. After that, it deletes from this pool, i.e. generation, a percentage of the solutions that result in high values of the objective function. The remaining potential solutions, those with low values of the objective function, are complemented using newly generated potential solutions in order to replace the deleted ones. This procedure is repeated until the newly generated solutions are no longer yielding better results. This optimization method is well known, and it has been programmed and introduced as a function in numerous computer software.

In this case, for a given μ_2 and ζ_1, $G_{(\mu_2,\zeta_1)}$ is calculated at any given set of possible solutions (λ_2, ζ_2). As previously defined, $G_{(\mu_2,\zeta_1)}$ is the maximum of A_{X_1} and it is calculated numerically at each possible solution as follows: for a given set of $(\mu_2, \zeta_1, \lambda_2, \zeta_2)$, the maximum of A_{X_1} take place at frequency ratios calculated by

setting the derivative of the frequency response function to zero $\frac{\partial A_{X_1}}{\partial r} = 0$. Solving this equation yields a fifth order polynomial in r^2:

$$b_5 r^{10} + b_4 r^8 + b_3 r^6 + b_2 r^4 + b_1 r^2 + b_0 = 0 \tag{5}$$

Where

$$b_0 = 2\lambda_2^4(-2\zeta_1^2 + \mu_2 + 1)$$

$$b_1 = -2\lambda_2^2\big(\lambda_2\mu_2\big((\lambda_2 + 2)(\mu_2 + 2) - 8\zeta_1^2\big) + 8\zeta_2^2(2\zeta_1^2 - \mu_2 - 1) + \lambda_2^2\big)$$

$$b_2 = -8\zeta_2^2\lambda_2(\mu_2(-8\zeta_1^2 + 3\mu_2 + 4) + 2\lambda_2(\mu_2 + 1)^2) + 32\zeta_2^4(-2\zeta_1^2 + \mu_2 + 1)$$
$$- 24\zeta_1\zeta_2\lambda_2^2\mu_2^2 + 2\lambda_2^2\mu_2\big(\mu_2(-12\zeta_1^2 + \mu_2 + 6) + \lambda_2(\mu_2 + 1)(\mu_2 + 4)\big)$$

$$b_3 = -4\big(-4\zeta_2^2\mu_2\big((1 - 2\zeta_1^2)\mu_2 + \lambda_2(\mu_2 + 1)(\mu_2 + 2)\big) - 8\zeta_1\zeta_2\lambda_2\mu_2^3$$
$$+ \lambda_2\mu_2^2(2\mu_2(-2\zeta_1^2 + \lambda_2 + 1) + 3\lambda_2) + 8\zeta_2^4(\mu_2 + 1)^2 + 16\zeta_1\zeta_2^3\mu_2^2\big)$$

$$b_4 = 2\mu_2^2(\mu_2(\mu_2(-2\zeta_1^2 + \lambda_2 + 1) + 4\lambda_2) - 2\zeta_2^2(\mu_2(\mu_2 + 2) + 4) - 4\zeta_1\zeta_2\mu_2^2)$$

$$b_5 = -2\mu_2^4$$

This polynomial is solved numerically and the real solutions of the frequency ratios r_i will depict the position of maxima/minima. The optima h_i of the function is then obtained by evaluating the objective function at all possible positions r_i, including the solution at $r = 0$, i.e. $h_0 = 1$. The highest value out of all possible solutions is kept as the maximum of the function, in other words, $G_{(\mu_2,\zeta_1)} =$

$\max(h_0, h_i)$. In this case the function can assume one maximum and one minimum, or two maxima and two minima.

2-4. Optimal Results

Starting with a given set of (μ_2, ζ_1), the optimal solution is obtained numerically and, to save on time, a first optimal solution is calculated using the genetic algorithm technique which is set to make sure it converges to the global optimal solution in that case. This can be achieved by increasing the population number, the convergence tolerance, and the ranges of the decision variables which are here (λ_2, ζ_2). Then, the optimal solution associated with a small increment from the previous set (μ_2, ζ_1) is obtained using the search technique based on the simplex method, starting from the optimal solution calculated for the former (μ_2, ζ_1) set. The remaining solutions are obtained using the search technique based on the simplex method starting always from the previous optimal solution since it will be near the new optimal solution provided that small increments of the (μ_2, ζ_1) variables are used.

The optimal parameters are obtained for a range of (μ_2, ζ_1) sets and plotted in **Figure 2–3**. Three different values of ζ_1 are chosen, namely, $\zeta_1 = 0$, 0.1, 0.2, and the mass ratio μ_2 is varied from 0.01 to 0.5. The minimum mass ratio used is 1% since 0 is not an option because some mass should be used otherwise a 0 mass means no absorber is attached. The 0.5 limit on the mass ratio is considered a reasonable number since the classical absorber mass should be a small fraction of the primary system mass. From **Figure 2–3**, it is deduced that both λ_2 and ζ_2 increase with the

increasing of the mass ratio μ_2. In other words, the increase of the absorber mass m_2, increases the optimal spring stiffness and damping constant of the absorber.

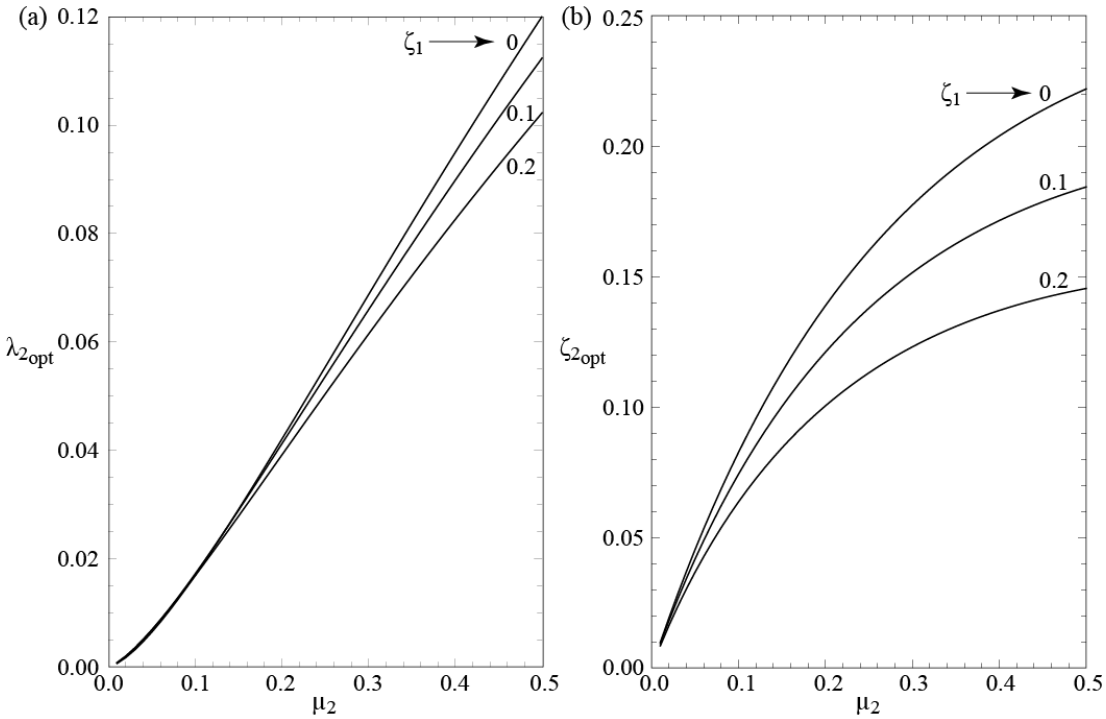

Figure 2–3. Plots of (a) Optimal Stiffness Ratio $\lambda_{2_{opt}}$ and (b) Optimal Damping Ratio $\zeta_{2_{opt}}$

The optimal shape of the frequency response function is shown in **Figure 2–4** for two primary damping cases namely, $\zeta_1 = 0.05$ in **Figure 2–4(a)** and $\zeta_1 = 0.1$ in **Figure 2–4(b)**. In each plot, four cases of the mass ratio are shown, namely $\mu_2 = 0.01, 0.05, 0.1, 0.2$. It can be easily deduced as expected that the height of the peaks decreases with the increase of the mass ratio. Furthermore, the optimal shape of the frequency response function exhibit two equal peaks. This was not taken into account when solving the optimization problem to keep the problem unconstrained.

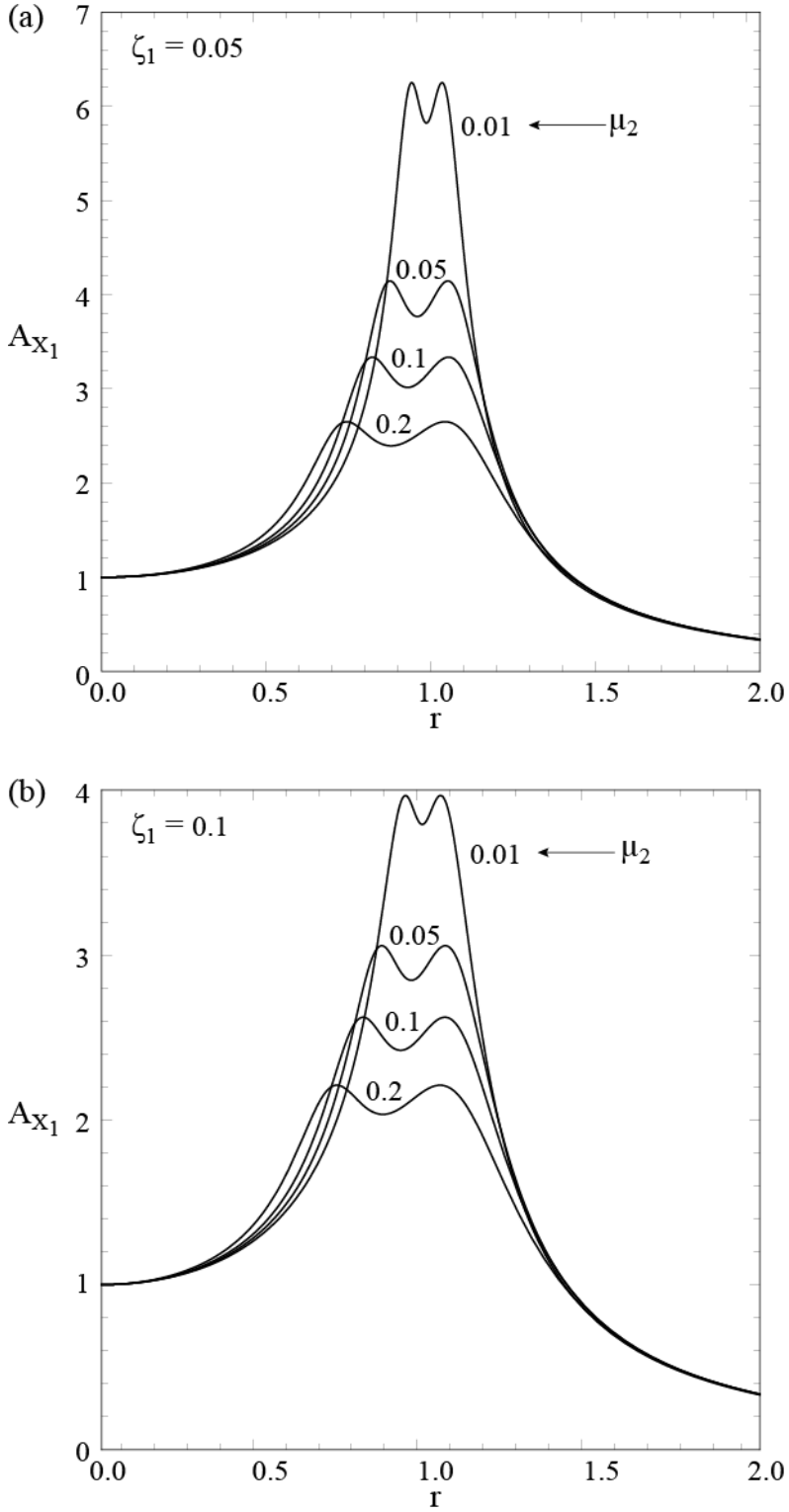

Figure 2–4. Plots of A_{X_1} Using the Optimal Parameters for (a)$\zeta_1 = 0.05$ and (b) $\zeta_1 = 0.1$

Finally, the optimal heights of the frequency response function peaks are plotted in **Figure 2–5** for a range of μ_2 and for three values of primary system damping ratio $\zeta_1 = 0,\ 0.1,\ 0.2$. The figure clearly shows that the peaks' heights decrease with the increasing of the absorber mass, as expected. Hence, the classical absorber performance increases with the increasing of the absorber mass, which is well-known.

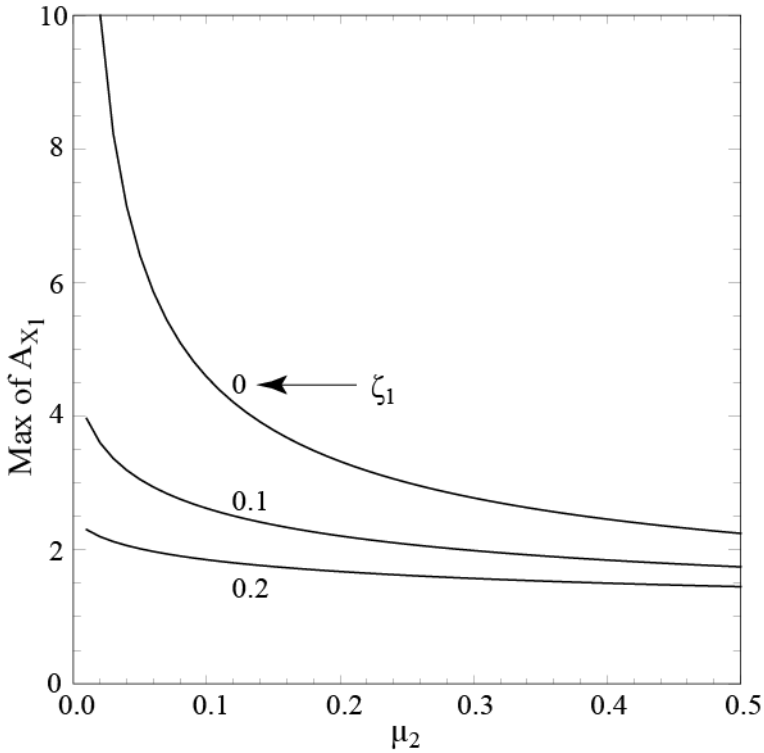

Figure 2–5. Plots of the Maximum of A_{X_1} for $0.01 \leq \mu_2 \leq 0.5$ and some values of ζ_1

Chapter Three

Platform Vibration Absorber

3-1. Equation of Motion

The platform absorber configuration shown in **Figure 3–1** is obtained by switching the positions of the primary system and absorber of the classical setup. In fact, the platform absorber setup is a single degree of freedom system where the platform is a mass directly connected to the ground through a spring and viscous damper. The primary system sits on the platform and is connected to it through a spring and damper. Here too, the primary system is assumed to be harmonically forced where $f(t) = f_0 \sin(\omega t)$. The equation of motion of this system can be written as:

$$\begin{aligned} m_1\ddot{x}_1 + c_1(\dot{x}_1 - \dot{x}_3) + k_1(x_1 - x_3) &= f_0 \sin(\omega t) \\ m_3\ddot{x}_3 + c_3\dot{x}_3 + c_1(\dot{x}_3 - \dot{x}_1) + k_3x_3 + k_1(x_3 - x_1) &= 0 \end{aligned} \tag{6}$$

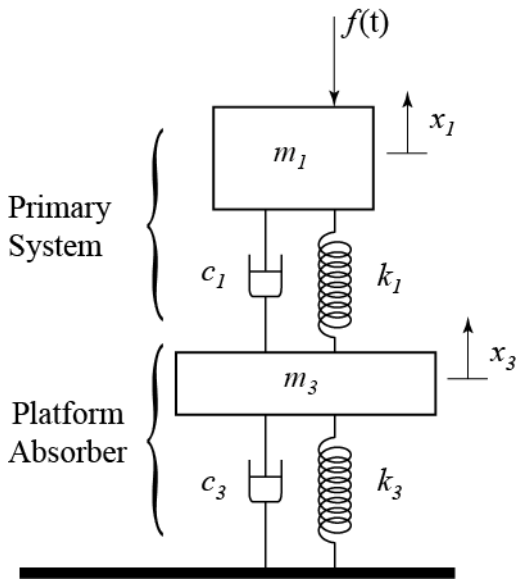

Figure 3–1. The Platform Vibration Absorber Setup

3-2. Frequency Response Function

The complex frequency response function of the primary system and absorber are deduced from Eq.(6) and take the following forms:

$$X_1 = -\frac{f_0\big(k_1 + k_3 - m_3\omega^2 + \mathbf{i}\omega(c_1 + c_2)\big)}{\alpha_{TPD}}$$

$$X_3 = -\frac{f_0(k_1 + \mathbf{i}c_1\omega)}{\alpha_{TPD}} \tag{7}$$

Where

$$\alpha_{TPD} = (k_1 + \mathbf{i}c_1\omega)^2 - (k_1 - m_1\omega^2 + \mathbf{i}c_1\omega)\big(k_1 + k_3 - m_3\omega^2 + \mathbf{i}\omega(c_1 + c_2)\big)$$

The dimensionless forms of these functions are calculated using the dimensionless parameters as follows:

$$\frac{k_1 X_1}{f_0} = \frac{1 + \ \lambda_3 \ - \ r^2 \mu_3 + \ \mathbf{i} 2r(\zeta_1 + \zeta_3)}{\beta_{THD}}$$

$$\frac{k_1 X_3}{f_0} = \frac{1 + \ \mathbf{i} 2r\zeta_1}{\beta_{THD}} \tag{8}$$

Where

$\beta_{THD} = \lambda_3 + r^4 \mu_3 - r^2(1 + 4\zeta_1\zeta_3 + \lambda_3 + \mu_3) + 2\mathbf{i}r(\zeta_1 + \zeta_3\lambda_3) - 2\mathbf{i}r^3(\zeta_1 + \zeta_3 + \zeta_1\mu_3)$.

The amplitude of the steady state response of the primary system and absorber are obtained from the norms of expression given in Eq.(8). After simplifications, they are written as:

$$A_{X_1} = \sqrt{\frac{{a_3}^2 + {a_4}^2}{{a_1}^2 + {a_2}^2}}, \qquad A_{X_3} = \sqrt{\frac{{a_5}^2 + {a_6}^2}{{a_1}^2 + {a_2}^2}} \tag{9}$$

Where

$a_1 = r^2(-4\zeta_1\zeta_3 + \mu_3(r^2 - 1) - 1) - \lambda_3(r^2 - 1)$

$a_2 = -2r(-\zeta_1\lambda_3 - \zeta_3 + \zeta_1\mu_3 r^2 + (\zeta_1 + \zeta_3)r^2)$

$a_3 = \lambda_3 - \mu_3 r^2 + 1$

$a_4 = 2r(\zeta_1 + \zeta_3)$

$a_5 = 1$

$a_6 = 2r\zeta_1$

The optimization problem here is identical to that solved in the classical absorber setup case. That is, the primary system parameters (m_1, k_1, c_1) are known and the absorber parameters (m_3, k_3, c_3) are to be calculated with the aim of reducing the maximum of the primary system frequency response function for all forcing frequencies. In dimensionless form, given the primary system damping ratio ζ_1 and the absorber mass ratio μ_3, the optimal absorber stiffness and damping ratios are calculated, namely, $\lambda_{3_{\mathrm{opt}}}$ and $\zeta_{3_{\mathrm{opt}}}$ respectively. The first step is to observe the shape of the frequency response function as this will allow a better understanding of its behavior as the decision variables change. **Figure 3–2** shows a few examples plots of A_{X_1} for $\mu_3 = 4$ and $\zeta_1 = 0.1$, with three different sets of ζ_3 and λ_3.The same observation made in the case of the classical absorber applies here where it is clear that the function can have two peaks. However, the difference lies in the static deflection, where it is equal to 1 for the classical absorber setup, but depends on λ_3 here. This is due to the fact that the primary mass in the platform absorber setup is not attached to ground directly, but to the platform, hence its static deflection will depend on the absorber spring stiffness k_3. Furthermore, $r = 0$ can be either a maximum or a minimum as shown. In the next section, the optimization procedure utilized to determine the optimal system parameters is briefly summarized.

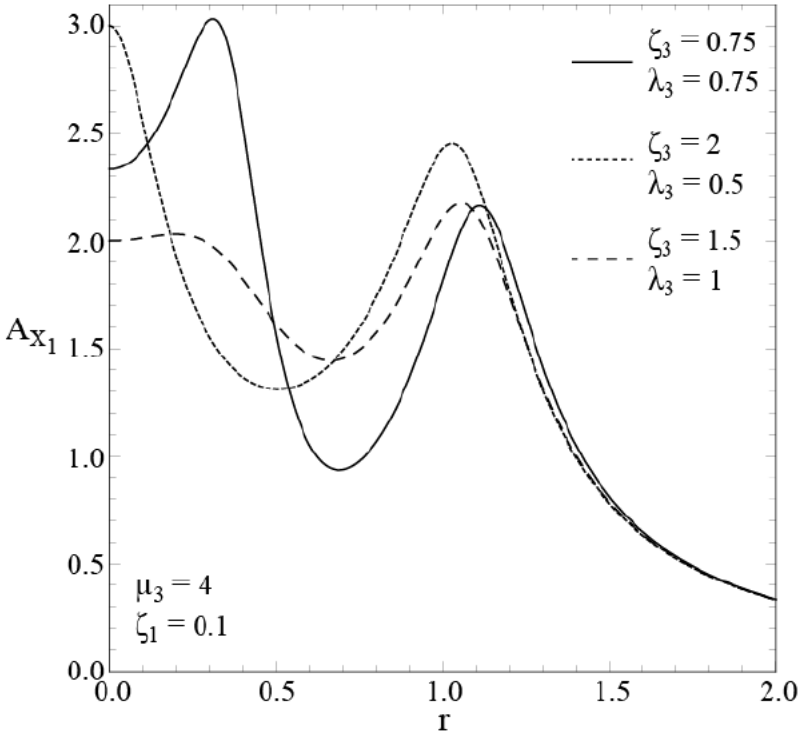

Figure 3–2. Plots of A_{X_1} for $\mu_3 = 4$ and $\zeta_1 = 0.1$

3-3. Optimization Procedure

The same procedure used in the case of the classical setup is adopted here. Hence, for a given set of (μ_3, ζ_1), the optimal absorber parameters namely, $\lambda_{3_{opt}}$ and $\zeta_{3_{opt}}$, are calculated with the aim of minimizing the function $G_{(\mu_3,\zeta_1)} = \max_r A_{X_1}$. The combination of the genetic algorithm technique and the search method based on the simplex method is used. The optima of A_{X_1} are obtained by first solving for the roots of the optima from the following equation $\frac{\partial A_{X_1}}{\partial r} = 0$. This yields a 5th order polynomial in r^2 which takes the form:

$$b_5 r^{10} + b_4 r^8 + b_3 r^6 + b_2 r^4 + b_1 r^2 + b_0 = 0 \tag{10}$$

Where

$$b_0 = 2\lambda_3\big(\lambda_3\big(\lambda_3\big((1-2\zeta_1^2)\lambda_3 - 4\zeta_1^2 + 3\big) + 4\zeta_1\zeta_3 + \mu_3 + 3\big) - 4\zeta_3^2 + \mu_3 + 1\big) - 4\zeta_3^2$$

$$\begin{aligned} b_1 = {} & 4(\lambda_3+1)^2\mu_3\big((4\zeta_1^2-2)\lambda_3 - 1\big) - 2(2\lambda_3+1)\mu_3^2 \\ & - 2(\lambda_3+1)^2(\lambda_3(-8\zeta_1^2+\lambda_3+2) + 8(2\zeta_1^2-1)\zeta_3^2 + 1) \end{aligned}$$

$$\begin{aligned} b_2 = {} & 2\big(\mu_3^2\big(\lambda_3\big((6-12\zeta_1^2)\lambda_3 - 20\zeta_1^2 + 11\big) - 4\zeta_1(2\zeta_1+\zeta_3) + 5\big) + 4\zeta_1^4 + 8\zeta_3\zeta_1^3 \\ & + 4\mu_3(\lambda_3(\lambda_3(-5\zeta_1^2+\lambda_3+3) + 2(4\zeta_3^2-5)\zeta_1^2 - 4\zeta_3\zeta_1 - 4\zeta_3^2 + 3) \\ & + 4(\zeta_3^2-1)\zeta_1^2 - 2\zeta_3\zeta_1 - 3\zeta_3^2) + 8(\zeta_1+\zeta_3)^2\lambda_3(2\zeta_1^2-\lambda_3-2) \\ & - 8(\zeta_1+\zeta_3)^2\big((4\zeta_1^2-2)\zeta_3^2+1\big) + \mu_3^3 + 4\mu_3\big) \end{aligned}$$

$$\begin{aligned} b_3 = {} & -4\big(8(\zeta_1+\zeta_3)^2\mu_3(2\zeta_1^2-\lambda_3-1) - 2(2\zeta_1^2-1)(\lambda_3+1)\mu_3^3 + 8\mu_3^2(\zeta_1+\zeta_3)^4 \\ & + \mu_3^2(\lambda_3(-8\zeta_1^2+3\lambda_3+6) + 8\zeta_1^4 + 16\zeta_3\zeta_1^3 + 4(2\zeta_3^2-3)\zeta_1^2 - 8\zeta_3\zeta_1 \\ & - 4\zeta_3^2+3)\big) \end{aligned}$$

$$b_4 = -2\mu_3^2(4\mu_3(\zeta_1^2-\lambda_3-1) + (2\zeta_1^2-1)\mu_3^2 + 8(\zeta_1+\zeta_3)^2)$$

$$b_5 = -2\mu_3^4$$

The roots of the optima are solved from Eq.(10) except for the optima at $r = 0$, which height is calculated analytically and takes the form $h_0 = \frac{1}{\lambda_3} + 1$. The remaining heights h_i are obtained numerically using the solutions of Eq.(9) and Eq.(10). The objective function is finally numerically calculated as $G_{(\mu_3,\zeta_1)} = \max(h_0, h_i)$.

3-4. Optimal Results

The optimal absorber parameters are obtained for a range of absorber mass and system damping ratios similar to the case of the classical absorber. Five different

values of the system damping ratio are used, namely, $\zeta_1 = 0, 0.05, 0.1, 0.15, 0.2$. As for the mass ratio, it was varied from 0 to 5 with 0.01 increments. The same strategy used before is adopted here, for example, the genetic algorithm is first used at one set of points ($\zeta_1 = 0, \mu_3 = 0$). Then, the mass ratio μ_3 is incremented by 0.01 and the search simplex method is used to find the optimal solution at that point starting the search using the previous optimal solution corresponding to $\mu_3 = 0$. This step is repeated by incrementing the mass ratio by 0.01 and getting for the optimal solution using the search simplex method starting with the previous optimal solution. The optimal parameters $\lambda_{3_{\text{opt}}}$ and $\zeta_{3_{\text{opt}}}$ are plotted in **Figure 3–3**. The trend for $\zeta_{3_{\text{opt}}}$ is not clear but $\lambda_{3_{\text{opt}}}$ shows a clear trend where it increases with the increasing of the mass ratio.

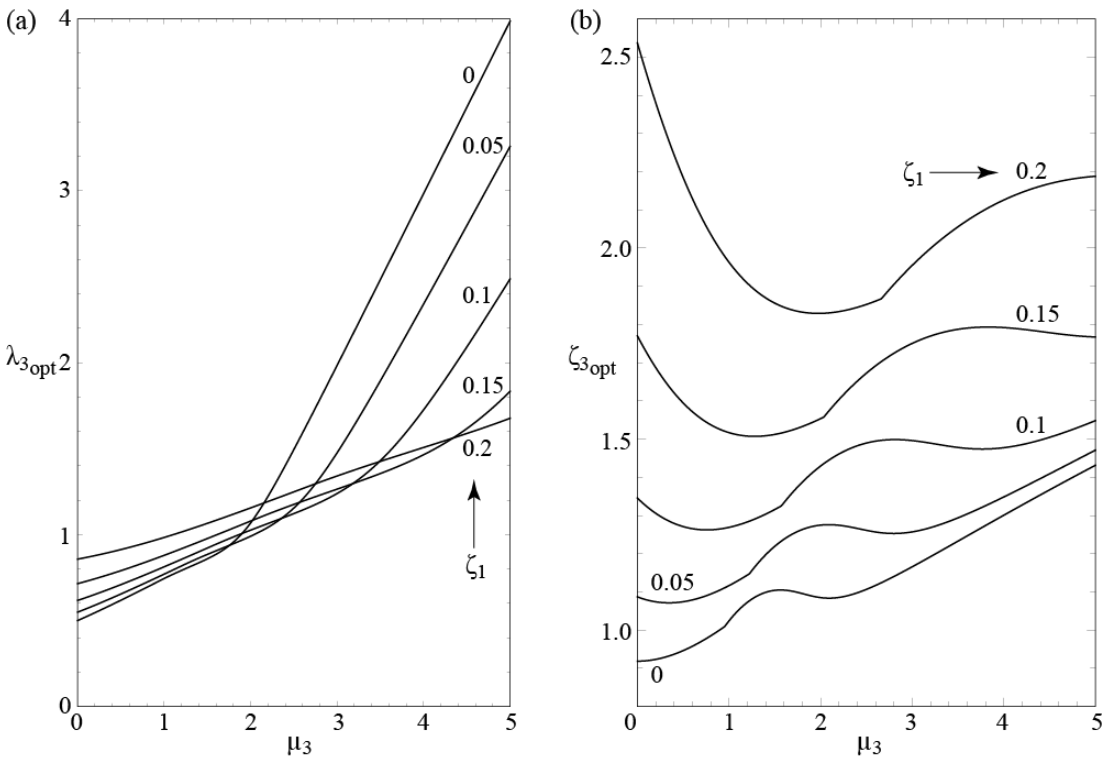

Figure 3–3. Plots of (a) Optimal Stiffness Ratio $\lambda_{3_{\text{opt}}}$ and (b) Optimal Damping Ratio $\zeta_{3_{\text{opt}}}$

If the platform mass ratio μ_3 is zero, the primary system becomes directly attached to the ground by a resilient element made of a spring with stiffness k_3 and a viscous damper with coefficient c_3. The optimal stiffness ratio $\lambda_{3_{\text{opt}}}$ and optimal damping ratio $\zeta_{3_{\text{opt}}}$ in this case are the values corresponding to the point of interception between each of the curves and the y-axis in **Figure 3–3**.

In **Figure 3–4**, the frequency response function of the primary system is plotted using the optimal parameters for two primary system damping ratios, namely for, $\zeta_1 = 0.05$ in **Figure 3–4(a)** and for $\zeta_1 = 0.1$ in **Figure 3–4(b)**. In each plot, three cases are shown, corresponding to three different mass ratios. In all the figures, it is clear that the optimal shape yields a frequency response function with two equally leveled peaks. Compared to the classical setup, here one of the peaks can occur at zero frequency. Furthermore, the figures clearly show the existence of an optimal mass ratio at which the absorber reaches its utmost performance. The frequency response function is shown in its utmost optimal shape in each of the figures, where the optimal mass ratio is $\mu_{3_{\text{opt}}} = 2.09$ for $\zeta_1 = 0.05$, shown in **Figure 3–4(a)**, and $\mu_{3_{\text{opt}}} = 2.81$ and $\zeta_1 = 0.1$, shown in **Figure 3–4(b)**. For example, in **Figure 3–4(a)**, the optimal shape is plotted for $\mu_3 = 1$ and $\mu_3 = 4$ in addition to $\mu_{3_{\text{opt}}} = 2.09$, where it is evident that the height of the peaks of the two curves corresponding to the two non-optimal mass ratios are higher than that corresponding to $\mu_{3_{\text{opt}}} = 2.09$. The same applies to **Figure 3–4(b)**.

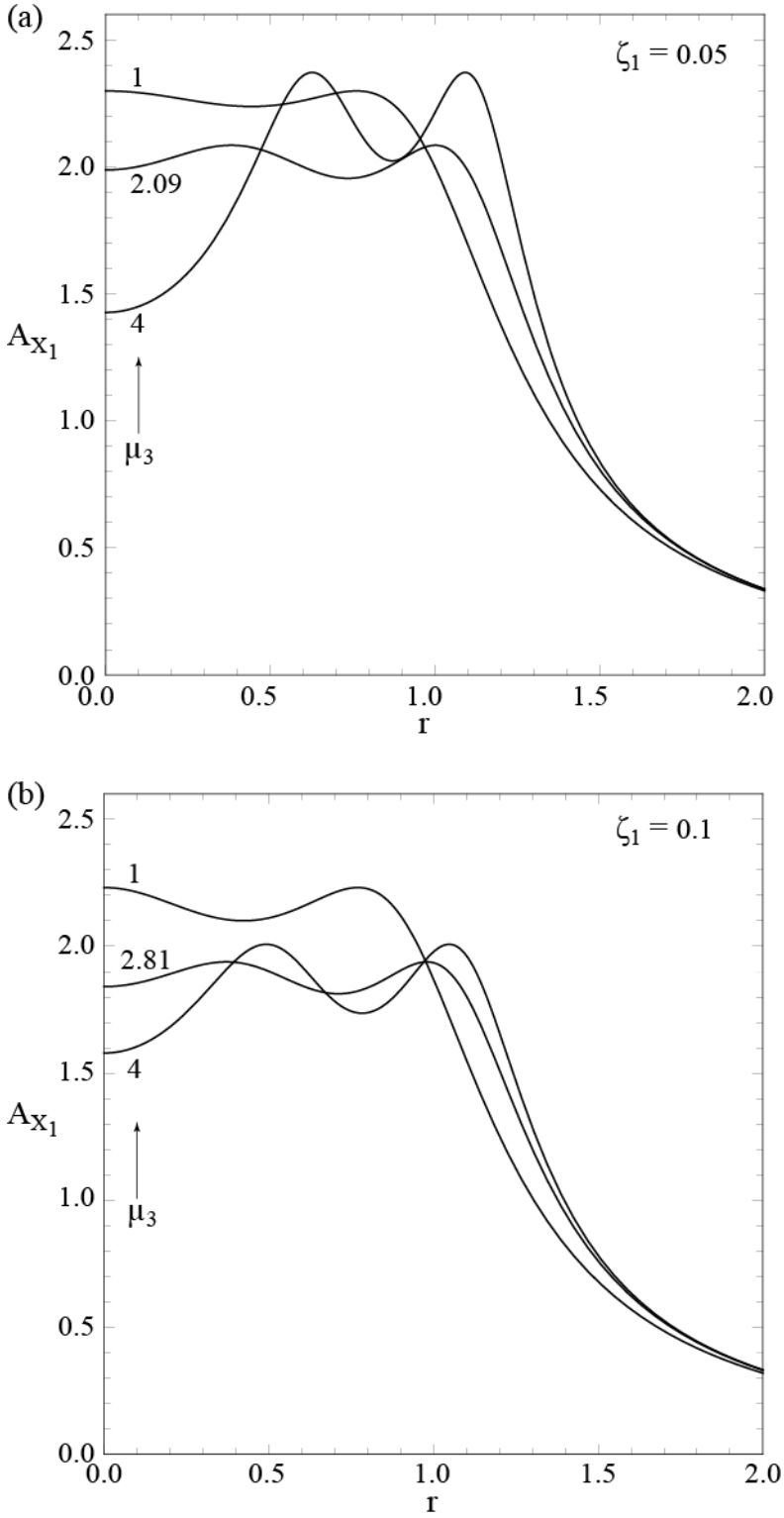

Figure 3–4. Plots of A_{X_1} Using the Optimal Parameters for (a) $\zeta_1 = 0.05$ and (b) $\zeta_1 = 0.1$

Using the optimal dimensionless parameters shown in **Figure 3–3**, the maximum of A_{X_1} is calculated and plotted in **Figure 3–5** for a set of value of the primary system damping. It is evident from the figure that an optimal mass ratio exists. For a given ζ_1, starting with zero absorber mass ratio, the optimal peak decreases with the increasing of the mass ratio, passes through a minimum value at the optimal mass ratio then starts to increasing with the further increasing of the mass ratio.

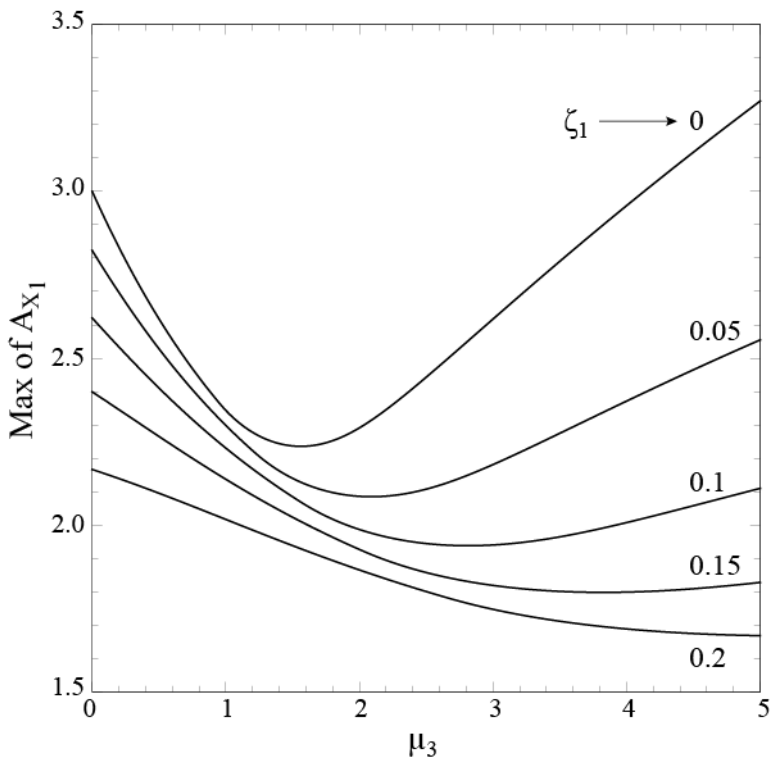

Figure 3–5. Plots of the Maximum of A_{X_1} for $0 \leq \mu_3 \leq 5$ and some values of ζ_1

Chapter Four

Dual Vibration Absorber

4-1. Equation of Motion

In this part, both the classical vibration absorber and the platform vibration absorber are combined to reduce the vibrations in a system subjected to a harmonic force. This new absorber setup type is referred to as the dual vibration absorber and shown in **Figure 4–1**. In this setup, the primary system is sandwiched between the classical and platform absorbers. The primary system is sitting on the platform absorber and coupled to a classical absorber. The system will now have three degrees of freedom, as it is now comprised of three masses with independent motions. Applying Newton's law to each of the masses results in the equation of motion of the system which is given below:

$$
\begin{aligned}
&m_1\ddot{x}_1 + c_1(\dot{x}_1 - \dot{x}_3) + c_2(\dot{x}_1 - \dot{x}_2) + k_1(x_1 - x_3) + k_2(x_1 - x_2) = f_0 \sin(\omega t) \\
&m_2\ddot{x}_2 + c_2(\dot{x}_2 - \dot{x}_1) + k_2(x_2 - x_1) = 0 \\
&m_3\ddot{x}_3 + c_3\dot{x}_3 + c_1(\dot{x}_3 - \dot{x}_1) + k_3x_3 + k_1(x_3 - x_1) = 0
\end{aligned}
\tag{11}
$$

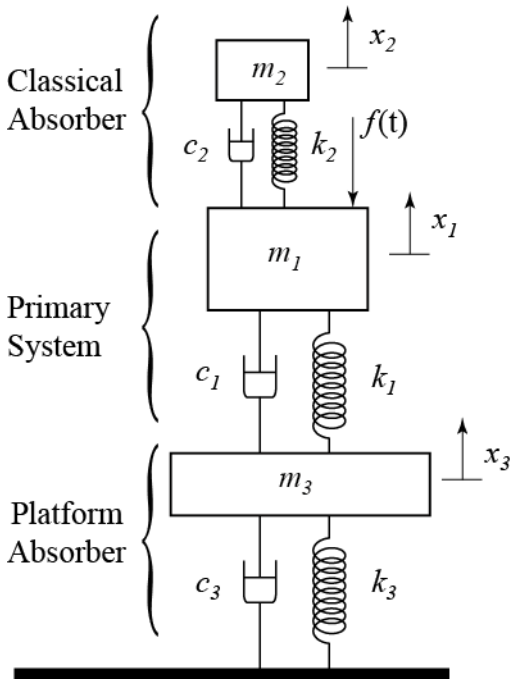

Figure 4–1. The Dual Vibration Absorber Setup

4-2. Frequency Response Function

The steady state complex frequency response functions of the primary system and two absorbers are deduced from Eq.(11) as follows:

$$X_1 = -\frac{f_0(k_2 - m_2\omega^2 + \mathbf{i}c_2\omega)\big(k_1 + k_3 - m_3\omega^2 + \mathbf{i}\omega(c_1 + c_3)\big)}{\alpha_{THD}}$$

$$X_2 = -\frac{f_0(k_2 + \mathbf{i}c_2\omega)\big(k_1 + k_3 - m_3\omega^2 + \mathbf{i}\omega(c_1 + c_3)\big)}{\alpha_{THD}} \qquad (12)$$

$$X_3 = -\frac{f_0(k_1 + \mathbf{i}c_1\omega)(k_2 - m_2\omega^2 + \mathbf{i}c_2\omega)}{\alpha_{THD}}$$

Where

$$\alpha_{THD} = (k_1 + \mathbf{i}c_1\omega)^2(k_2 - m_2\omega^2 + \mathbf{i}c_2\omega)$$
$$- \left(k_1 + k_3 - m_3\omega^2 + \mathbf{i}\omega(c_1 + c_3)\right)\Big((k_2 + \mathbf{i}c_2\omega)^2$$
$$+ (k_2 - m_2\omega^2 + \mathbf{i}c_2\omega)\left(k_2 + k_1 - m_1\omega^2 + \mathbf{i}\omega(c_1 + c_2)\right)\Big)$$

In dimensionless form, the complex frequency response functions given in Eq.(12) reduce to:

$$\frac{k_1X_1}{f_0} = \frac{(r^2\mu_2 - \lambda_2 - \mathbf{i}2r\zeta_2)\left(1 + \lambda_3 - r^2\mu_3 + \mathbf{i}2r(\zeta_1 + \zeta_3)\right)}{\beta_{THD}}$$
$$\frac{k_1X_2}{f_0} = \frac{(-\lambda_2 - \mathbf{i}2r\zeta_2)\left(1 + \lambda_3 - r^2\mu_3 + \mathbf{i}2r(\zeta_1 + \zeta_3)\right)}{\beta_{THD}} \tag{13}$$
$$\frac{k_1X_3}{f_0} = \frac{(r^2\mu_2 - \lambda_2 - \mathbf{i}2r\zeta_2)(1 + \mathbf{i}2r\zeta_1)}{\beta_{THD}}$$

Where

$$\beta_{THD} = r^2(\lambda_2(\mu_2 + \mu_2\lambda_3 + 4\zeta_1\zeta_3 + \lambda_3 + \mu_3 + 1) + 4\zeta_2(\zeta_1\lambda_3 + \zeta_3) + \mu_2\lambda_3)$$
$$- r^4\big(\mu_2(\lambda_2\mu_3 + 4\zeta_1\zeta_3 + \lambda_3 + \mu_3 + 1) - \lambda_2\lambda_3 + r^6\mu_2\mu_3$$
$$+ 4\zeta_2\big((\mu_2 + 1)(\zeta_1 + \zeta_3) + \zeta_1\mu_3\big) + \lambda_2\mu_3\big) + 2\mathbf{i}r^3(\mu_2\zeta_3\lambda_3)$$
$$+ 2\mathbf{i}r^3\big(\lambda_2\zeta_1(\mu_2 + \mu_3 + 1)\big) - 2\mathbf{i}r(\lambda_3(\zeta_2 + \lambda_2\zeta_1) + \lambda_2\zeta_3)$$
$$+ 2\mathbf{i}r^3\big(\zeta_2(\mu_2 + \mu_2\lambda_3 + 4\zeta_1\zeta_3 + \lambda_3 + \mu_3 + 1) + \zeta_3(\lambda_2\mu_2 + \lambda_2 + \mu_2)\big)$$
$$- 2\mathbf{i}r^5(\mu_2(\mu_3(\zeta_2 + \zeta_1) + \zeta_1 + \zeta_3) + \zeta_2\mu_3)$$

The amplitudes of the steady state dimensionless frequency response functions of the primary system, classical absorber, and the platform absorber are calculated as:

$$A_{X_1} = \sqrt{\frac{{a_3}^2 + {a_4}^2}{{a_1}^2 + {a_2}^2}} \quad A_{X_3} = \sqrt{\frac{{a_5}^2 + {a_6}^2}{{a_1}^2 + {a_2}^2}} \quad A_{X_3} = \sqrt{\frac{{a_7}^2 + {a_8}^2}{{a_1}^2 + {a_2}^2}} \tag{14}$$

Where

$$\begin{aligned}
a_1 = {} & -\lambda_2\lambda_3 + r^4\left(-\left(4\zeta_2\zeta_3(\mu_2+1) + 4\zeta_1\left((\zeta_2+\zeta_3)\mu_2 + \zeta_2\right) + \lambda_3\mu_2 + \mu_2\right)\right) \\
& + r^2(\lambda_2(4\zeta_1\zeta_3 + \lambda_3\mu_2 + \lambda_3 + \mu_2 + 1) + 4\zeta_2(\zeta_1\lambda_3 + \zeta_3) + \lambda_3\mu_2) \\
& + \mu_3 r^2(\lambda_2 - r^2(4\zeta_1\zeta_2 + \lambda_2\mu_2 + \lambda_2 + \mu_2) + \mu_2 r^4) \\
a_2 = {} & 2r\Big(-\zeta_3\lambda_2 - \lambda_3(\zeta_1\lambda_2 + \zeta_2) - (\zeta_1+\zeta_3)\mu_2 r^4 + r^2\left(\zeta_1\left((\lambda_2+\lambda_3)\mu_2 + \lambda_2\right)\right) \\
& + r^2\left(\zeta_3(\lambda_2\mu_2 + \lambda_2 + \mu_2) + \zeta_2(4\zeta_1\zeta_3 + \lambda_3\mu_2 + \lambda_3 + \mu_2 + 1)\right) \\
& + \mu_3 r^2(\zeta_1\lambda_2 + \zeta_2 - (\zeta_1+\zeta_2)\mu_2 r^2 - \zeta_2 r^2)\Big) \\
a_3 = {} & -\lambda_2(\lambda_3+1) + r^2(4\zeta_2(\zeta_1+\zeta_3) + (\lambda_3+1)\mu_2) + \mu_3 r^2(\lambda_2 - \mu_2 r^2) \\
a_4 = {} & 2r(-\zeta_2(\lambda_3+1) - (\zeta_1+\zeta_3)(\lambda_2 - \mu_2 r^2) + \zeta_2\mu_3 r^2) \\
a_5 = {} & \lambda_2(-\lambda_2(\lambda_3+1) + 4\zeta_2(\zeta_1+\zeta_3)r^2 + \lambda_2\mu_3 r^2) \\
a_6 = {} & 2\lambda_2 r(-(\zeta_1+\zeta_3)\lambda_2 - \zeta_2(\lambda_3+1) + \zeta_2\mu_3 r^2) \\
a_7 = {} & \lambda_3(r^2(4\zeta_1\zeta_2 + \mu_2) - \lambda_2) \\
a_8 = {} & 2\zeta_1\lambda_3\mu_2 r^3 - 2\lambda_3 r(\zeta_1\lambda_2 + \zeta_2)
\end{aligned}$$

Just like the previous two vibration absorber setups, in the dual absorber setup, the primary system's mass m_1, spring stiffness k_1, and viscous-damping coefficient c_1, and consequently its damping ratio ζ_1, are known. Hence, the decision variables are the absorbers' parameters, namely, (m_2, c_2, k_2) and (m_3, c_3, k_3). Here too, the classical absorber mass can't be zero since this will reduce the system to the platform absorber setup. In dimensionless form, the problem is first solved as follows: given the primary system damping ratio ζ_1, and the absorber mass ratios μ_2 and μ_3, the optimal absorbers' stiffness ratios λ_2 and λ_3, and damping ratios ζ_2 and ζ_3, are calculated with the aim of minimizing the maximum of the primary system frequency response function for all forcing frequencies. Another case that is considered which is based on the platform absorber results is the determination of the optimal platform mass ratio. This problem reads as follows: given the primary system damping ratio ζ_1 and the mass ratio μ_2, the optimal absorbers' parameters are calculated including $\mu_{3_{\mathrm{opt}}}$. The frequency response function A_{X_1} of the system is shown in **Figure 4–2** for $\mu_2 = 0.05$, $\mu_3 = 3$, and $\zeta_1 = 0$, and three different sets of the remaining parameters. The shapes of the curves clearly illustrate the existence of at most three peaks. This was expected since the system now has three degrees of freedom, and if damping is not present, the frequency response function should entail resonance at three forcing frequencies, i.e. three infinite peaks at these frequencies. Another observation is that one of the peaks can occur at the zero-frequency point similar to the platform absorber case. The static deflection point here too is not fixed as in the case of the classical absorber. Instead, it depends on the spring stiffness of the platform. In the following section the optimization scheme is summarized.

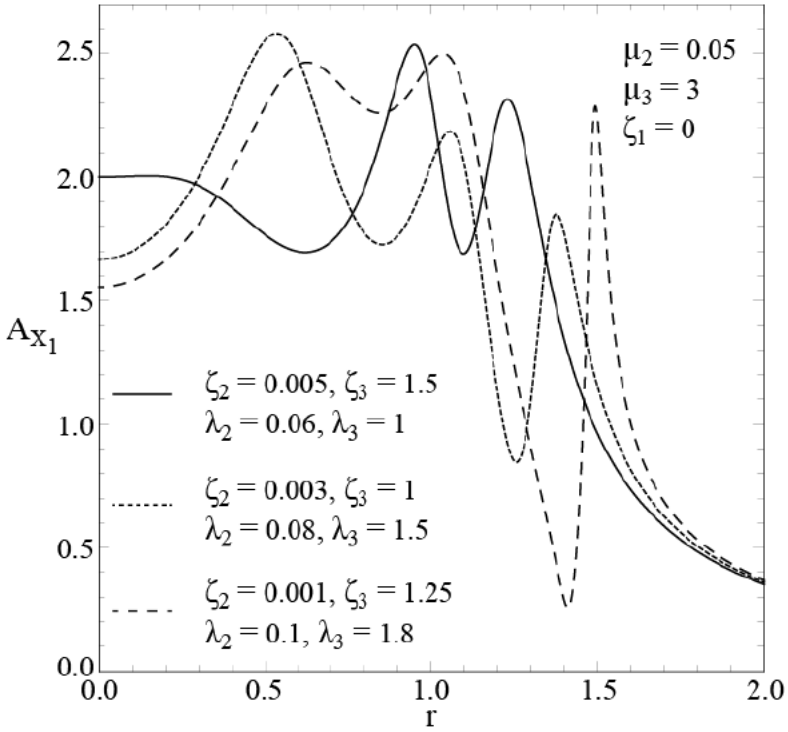

Figure 4–2. Plots of A_{X_1} for $\mu_2 = 0.05$, $\mu_3 = 3$, and $\zeta_1 = 0$

4-3. Optimization Procedure

The objective is to minimize the maximum amplitude of the primary system frequency response function A_{X_1} at all forcing frequencies ω. This is achieved by finding the optimal values for the dual absorber parameters. This is a minimax problem where the objective is the maximum of the steady state response of the primary system A_{X_1}. Therefore, knowing μ_2, μ_3, and ζ_1, the objective is to minimize $G_{(\mu_2,\mu_3,\zeta_1)}$ where $G_{(\mu_2,\mu_3,\zeta_1)} = \max_r A_{X_1}$.

Seeing that this system consists of seven different dimensionless parameters, $G_{(\mu_2,\mu_3,\zeta_1)}$ is too complex, and thus impossible to study analytically. Thus, as in the previous two vibration absorber setups, the problem is solved numerically using a combination of the genetic algorithm method and the search technique based on the simplex method.

As before, a first point is obtained using the genetic algorithm method then the remaining solution corresponding to the increments from this initial solution are obtained using the search simplex method by starting the search from the previous solution. In the process, the objection function is calculated as follows: for a given set of parameters, the frequency ratios of the peaks of the frequency response function are the roots of this equation $\frac{\partial A_{X_1}}{\partial r} = 0$ which simplifies to the below polynomial of the 9th order in r^2:

$$b_9 r^{18} + b_8 r^{16} + b_7 r^{14} + b_6 r^{12} + b_5 r^{10} + b_4 r^8 + b_3 r^6 + b_2 r^4 + b_1 r^2 + b_0 = 0 \quad (15)$$

The coefficients of the polynomial are reported in the Appendix to reduce verbosity. As a first step, the above equation is solved and the height of the optima h_i are those associated with positive roots. $h_0 = \frac{1}{\lambda_3} + 1$ is the height of the optimum at $r = 0$. The objective is then obtained $G_{(\mu_2,\mu_3,\zeta_1)} = \max(h_0, h_i)$.

4-4. Optimal Results

As mentioned before, the problem is solved using two approaches. In the first, the problem is solved for five different values of the primary system damping ratio namely $\zeta_1 = 0, 0.05, 0.1, 0.15, 0.2$, and for the following ranges of the absorber mass ratios μ_2 from 0.01 to 0.5 with 0.01 increments and μ_3 from 0 to 5 with 0.01 increments. In the second approach, $\zeta_1 = 0$, 0.05, μ_2 from 0.01 to 0.2 with 0.01 increments but now the optimal mass ratio $\mu_{3_{\mathrm{opt}}}$ is a decision variable that is calculated with the remaining parameters.

A set of optimal parameters are plotted in **Figure 4–3** using the first approach and for $\mu_2 = 0.05$. Five curves, each associated with one of the $\zeta_1 = 0$, 0.05, 0.1, 0.15, 0.2, values considered and plotted versus μ_3 from 0 to 5. The trends of the curves of $\lambda_{2_{\mathrm{opt}}}$ and $\zeta_{2_{\mathrm{opt}}}$ do not look like those of the classical absorber shown in **Figure 2–3.** While the curves of $\lambda_{3_{\mathrm{opt}}}$ and $\zeta_{3_{\mathrm{opt}}}$ show trends similar to those associated with the platform absorber optimal parameters shown in **Figure 3–3.**

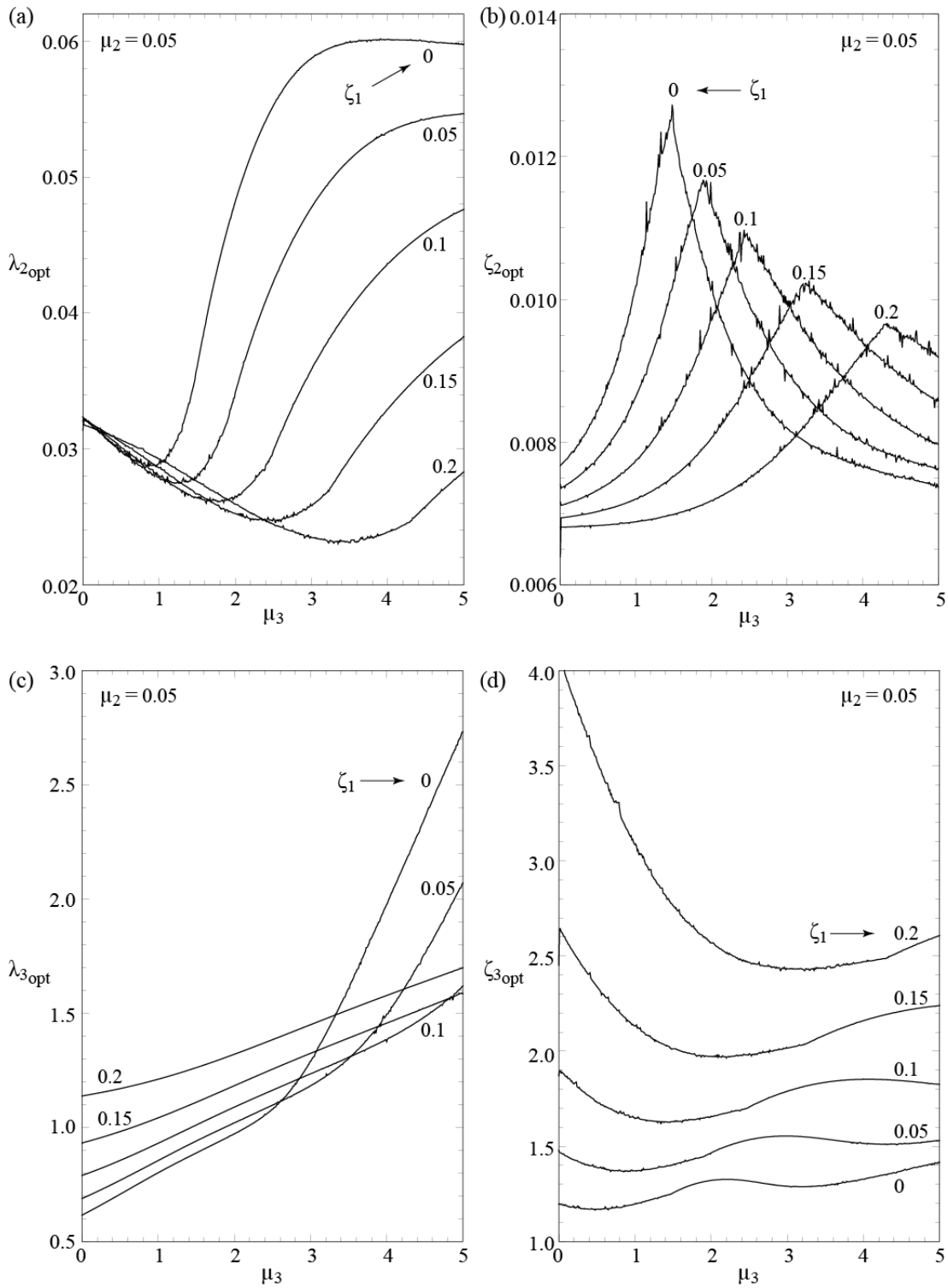

Figure 4–3. Plots of the Classical Absorber's (a) Optimal Stiffness Ratio $\lambda_{2_{\text{opt}}}$ and (b) Optimal Damping Ratio $\zeta_{2_{\text{opt}}}$ and the Platform Absorber's (c) Optimal Stiffness Ratio $\lambda_{3_{\text{opt}}}$ and (d) Optimal Damping Ratio $\zeta_{3_{\text{opt}}}$

A few optimal plots of the objective function are shown in **Figure 4–4(a)** for $\zeta_1 = 0.05$ and in **Figure 4–4(b)** for $\zeta_1 = 0.1$. In these plots, μ_2 is equal to 0.05, while different values of μ_3 are used to illustrate the existence of the optimal mass ratio $\mu_{3_{\text{opt}}}$. In **Figure 4–4(a)**, the optimal case $\mu_{3_{\text{opt}}} = 3.09$ and two other cases namely $\mu_3 = 1$ and $\mu_3 = 4$ are plotted. These values are chosen such that one of them is lower and the other is higher than $\mu_{3_{\text{opt}}}$. It is clearly depicted in these figures that the optimal shapes entail three peaks with equal heights. In the $\mu_3 = 1$ case, one of the peaks coincide with the zero-frequency point $r = 0$. A similar case is considered and shown in **Figure 4–4(b)** where $\zeta_1 = 0.1$ and the optimal mass ratio $\mu_{3_{\text{opt}}} = 4.14$. Two other mass ratio cases, namely $\mu_3 = 1$ and $\mu_3 = 5$ are considered for comparison purposes.

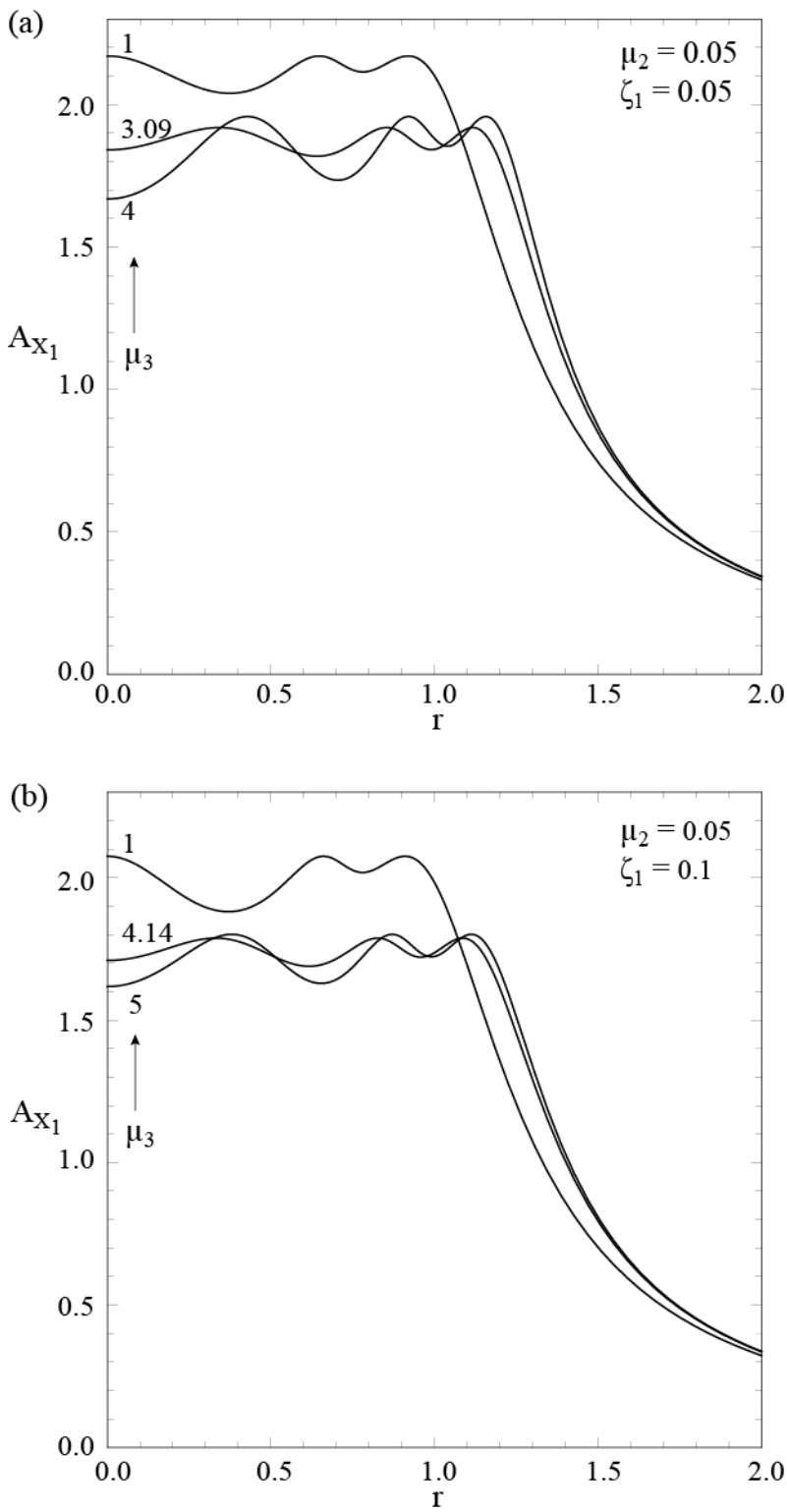

Figure 4–4. Plots of A_{X_1} Using the Optimal Parameters at $\mu_2 = 0.05$ and for (a) $\zeta_1 = 0.05$ and (b) $\zeta_1 = 0.1$

To illustrate the existence of $\mu_{3_{opt}}$, **Figure 4–5** shows the maximum of A_{X_1} in its optimal shape for five different sets of $\zeta_1 = 0, 0.05, 0.1, 0.15, 0.2$, $\mu_2 = 0.05$, and a range of μ_3 from 0 to 5. For example, if the $\zeta_1 = 0$ is considered, the figure clearly shows that as μ_3 increases from zero, the maximum of the frequency response function in its optimal shape decreases until it reaches a minimum value corresponding to $\mu_{3_{opt}} = 2.24$ and then increases again with the further increasing of μ_3. This applies to all the curves shown where it is clear that $\mu_{3_{opt}}$ increases with the increasing of the primary system damping ratio ζ_1.

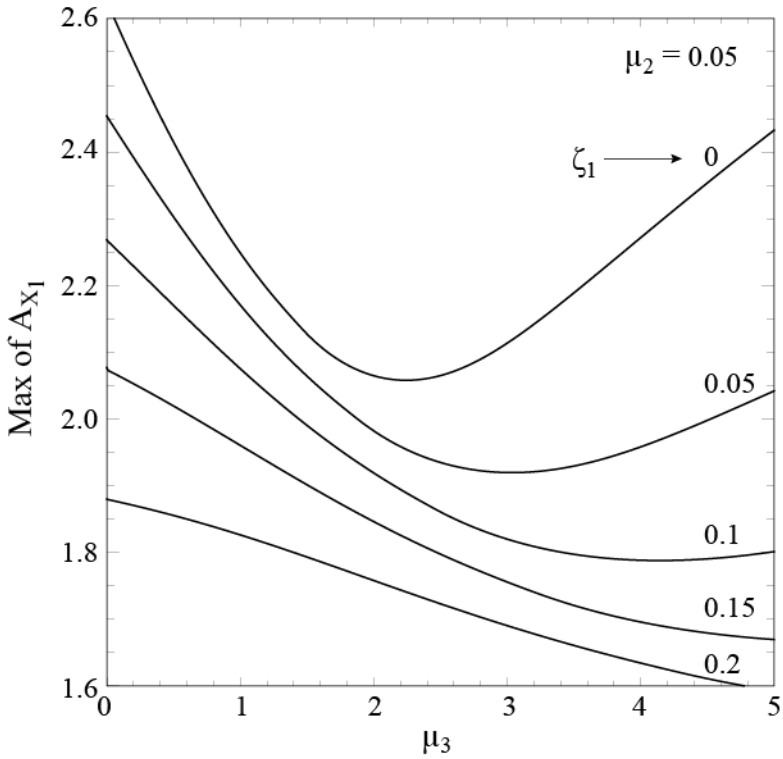

Figure 4–5. Plots of the Maximum of A_{X_1} for $\mu_2 = 0.05$, $0 \leq \mu_3 \leq 5$, and some values of ζ_1

Table 4-1. The Utmost Optimal Parameters of the Dual Absorber

$\zeta_1 = 0$						
μ_2	μ_{3opt}	λ_{2opt}	ζ_{2opt}	λ_{3opt}	ζ_{3opt}	A_{X_1}
0.01	1.76	0.033174	1.083742	0.103808	0.959594	2.168545
0.02	1.9	0.052754	1.103618	0.146752	0.975081	2.132896
0.03	2.02	0.069219	1.120837	0.17897	0.987293	2.10439
0.04	2.13	0.083841	1.136641	0.205399	0.997908	2.079834
0.05	2.24	0.097098	1.151514	0.228201	1.008041	2.057924
0.06	2.35	0.109311	1.165715	0.24834	1.017818	2.037964
0.07	2.46	0.120727	1.179419	0.266406	1.027152	2.019529
0.08	2.57	0.131369	1.192727	0.282783	1.036121	2.002338
0.09	2.69	0.141457	1.205657	0.298024	1.045754	1.986191
0.1	2.79	0.151251	1.218415	0.311477	1.053247	1.970927
0.11	2.91	0.16034	1.230856	0.324436	1.062199	1.956446
0.12	3.02	0.169072	1.243153	0.336189	1.069992	1.942647
0.13	3.11	0.177823	1.255324	0.346583	1.076214	1.929473
0.14	3.23	0.186008	1.267289	0.357039	1.084164	1.916828
0.15	3.36	0.193671	1.279035	0.367031	1.092963	1.904688
0.16	3.48	0.20114	1.290741	0.376166	1.100441	1.893012
0.17	3.59	0.208696	1.302336	0.384489	1.107343	1.881755
0.18	3.71	0.215719	1.313876	0.39255	1.11416	1.870889
0.19	3.83	0.222476	1.32511	0.400063	1.122443	1.86039
0.2	3.96	0.229137	1.336512	0.407416	1.129013	1.850217
$\zeta_1 = 0.05$						
μ_2	μ_{3opt}	λ_{2opt}	ζ_{2opt}	λ_{3opt}	ζ_{3opt}	A_{X_1}
0.01	2.38	0.032093	1.167855	0.100781	1.035791	2.021729
0.02	2.56	0.051459	1.191052	0.141723	1.05175	1.988574
0.03	2.73	0.067367	1.211008	0.172489	1.066435	1.962201
0.04	2.88	0.08166	1.229302	0.197559	1.078272	1.93959
0.05	3.04	0.094463	1.246442	0.219306	1.090504	1.919501
0.06	3.19	0.106381	1.262809	0.238286	1.101379	1.90127
0.07	3.34	0.117511	1.278563	0.255265	1.111842	1.88449
0.08	3.49	0.127958	1.293839	0.270624	1.121884	1.868891
0.09	3.64	0.13793	1.308682	0.284611	1.131916	1.85428
0.1	3.79	0.147292	1.323272	0.297472	1.140934	1.840508
0.11	3.94	0.156271	1.337553	0.309317	1.149928	1.827472
0.12	4.1	0.164809	1.351556	0.320447	1.159355	1.815081
0.13	4.25	0.173103	1.365386	0.330622	1.167786	1.803266
0.14	4.41	0.180986	1.379011	0.340258	1.176509	1.791968
0.15	4.57	0.188594	1.392461	0.349249	1.185057	1.781139
0.16	4.72	0.19607	1.405795	0.357511	1.192751	1.770738
0.17	4.88	0.203219	1.418972	0.365396	1.200771	1.760729
0.18	5.05	0.210052	1.432005	0.372933	1.209113	1.751082
0.19	5.21	0.216767	1.44496	0.379884	1.216634	1.741771
0.2	5.38	0.223225	1.457788	0.386551	1.224487	1.732772

The optimal absorber parameters are calculated for two values of the primary system damping ratio namely, $\zeta_1 = 0$ and $\zeta_1 = 0.05$, and a range of μ_2 from 0.01 to 0.2 with 0.01 increments. Finally, and to complete this study, the performances of all three absorber setups are compared in the next chapter.

Chapter Five

Performance Comparison

The performance of the dual absorber is compared to that of the classical and platform absorbers. The comparison is done as follows: the system with dual absorber is considered first with mass ratios μ_2 and μ_3, then its performance is compared to that of a system with a classical absorber setup with the same mass ratio μ_2 and to that of another system with a platform absorber setup with the same mass ratio μ_3. In **Figure 5–1**, the peak of the frequency response function of the primary system with dual absorber in its optimal shape is plotted for a range of μ_3 and four different (μ_2, ζ_1) cases as shown. Similarly, in all the figures, the case of a platform absorber is plotted for the purpose of comparison. It is clearly shown in all the figures that the peaks of A_{X_1} of the system with the dual absorber are lower than those with the platform absorber. Which means that the dual absorber outperforms the platform absorber. To compare the performance of the classical absorber with that of the dual absorber, first the optimal peak of the classical absorber is calculated as given in each of the figures. For example, in **Figure 5–1(a)**, $\mu_2 = 0.05$ and $\zeta_1 = 0$, the optimal height of the peak in the case of the classical absorber is 6.4 as depicted in the figure, which is higher than the height of the optimal peak of the dual absorber for the μ_3 range given here. This will change for higher μ_3 values when the height of the peak in the dual absorber setup case reaches 6.4, which is not shown in the plot. However, this will occur for large values of μ_3 which are considered physically unacceptable as they result in very heavy and large absorbers. The same

applies to the remaining figures, for example in **Figure 5–1(d)**, the optimal height of the classical absorber is 3.34 which is higher than all peaks of the dual absorber case for the μ_3 range given in this case. It is finally concluded that the dual absorber outperforms both the classical and platform absorbers.

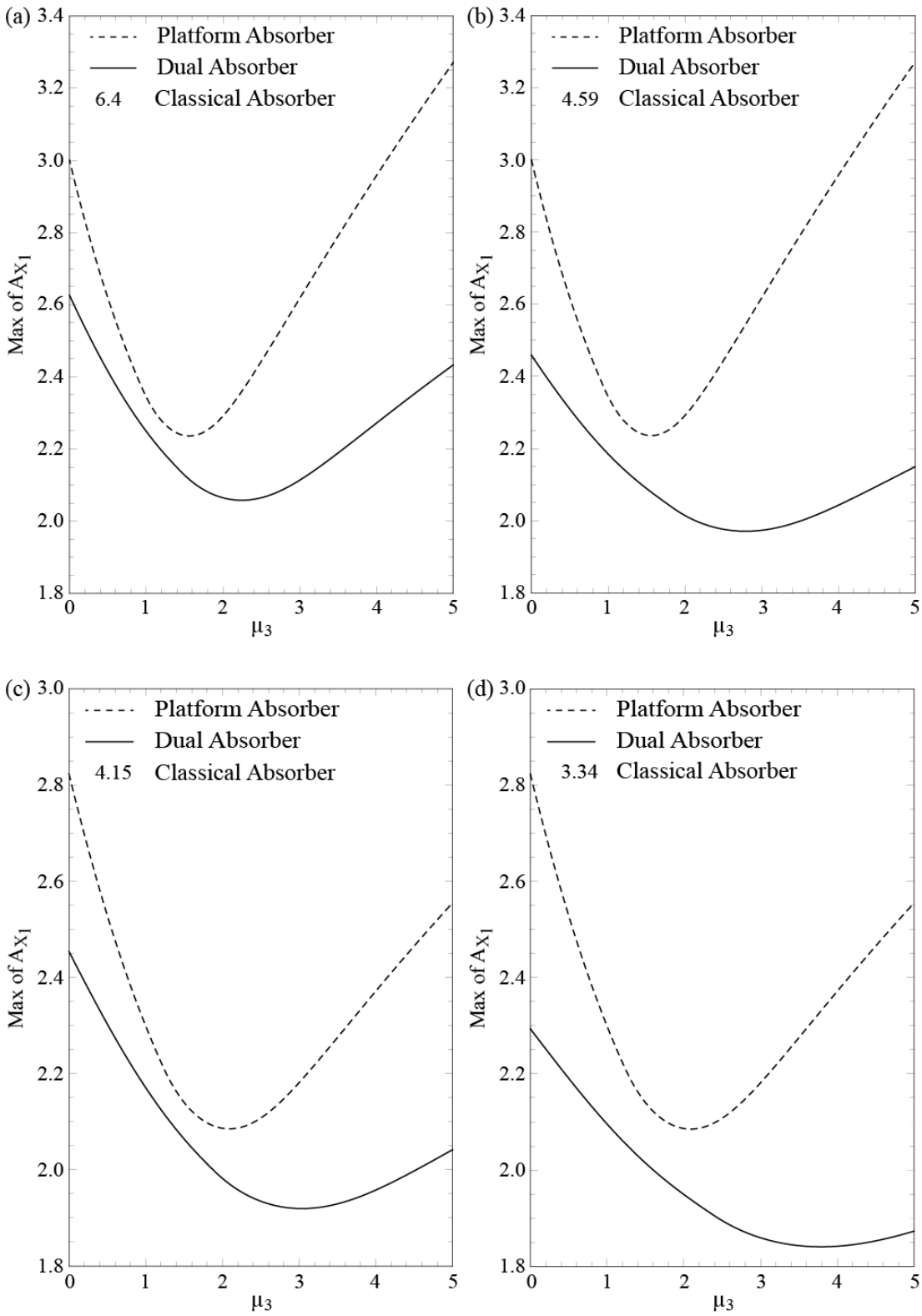

Figure 5–1. Plots of the Maximum of A_{X_1} Comparison between the Platform and Dual Vibration Absorbers for (a) $\mu_2 = 0.05$, $\zeta_1 = 0$ and (b) $\mu_2 = 0.1$, $\zeta_1 = 0$ and (c) $\mu_2 = 0.05$, $\zeta_1 = 0.05$ and (d) $\mu_2 = 0.1$, $\zeta_1 = 0.05$

Chapter Six

Conclusion

This study proposes a new type of vibration absorber setup, where the harmonically forced primary system is sandwiched between a classical and a platform absorber. Too optimization problems are solved. In both, the objective is to reduce the maximum of the frequency response function of the primary system for all forcing frequencies. The resultant mini-max problem is solved using a numerical method based on both genetic algorithms and the simplex search technique. In the first problem, for a given primary system damping ratio, upper and lower absorbers mass ratios, the absorber parameters are calculated and in the second, the lower absorber mass is considered a decision variable and thus calculated with the remaining absorber parameters. It is concluded that as in the case of the classical absorber setup, the dual absorber performance increases with the increasing of the classical absorber mass for a fixed platform mass. Furthermore, when the classical absorber mass was fixed, the dual absorber performance exhibited a maximum value at some optimal platform absorber mass. This behavior is similar to that of a platform absorber. The utmost dual absorber parameters associated with best performance are calculated for a range of primary system damping ratios and classical absorber mass ratios, and tabulated. The presented results are in dimensionless form, hence generic and can be used in the design of dual absorber for any single degree of freedom system. Compared to both the classical and platform absorber setups, the dual absorber setup performs better. The classical absorber can outperform the dual

absorber only for very large platform masses. However, these cases are considered physically unacceptable since they yield bulky and heavy systems.

References

Asami, T., & Nishihara, O. (2003). Closed-Form Exact Solution to H∞ Optimization of Dynamic Vibration Absorbers (Application to Different Transfer Functions and Damping Systems). *Journal of Vibration and Acoustics, 125*(3), 398-405.

Asami, T., Nishihara, O., & Baz, A. M. (2002). Analytical Soluations to H∞ and H2 Optimization of Dynamic Vibration Absorbers Attached to Damped Linear Systems. *Journal of Vibration and Acoustics, 124*(2), 284-295.

Ashour, O. N., & Nayfeh, A. H. (2003). Experimental and Numerical Analysis of a Nonlinear Vibration Absorber for the Control of Plate Vibrations. *Journal of Vibration and Control, 9*(1-2), 209-234.

Bapat, V., & Kumaraswamy, H. (1979). Effect of Primary System Damping on the Optimum Design of an Untuned Viscous Dynamic Vibration Absorber. *Journal of Sound and Vibration, 63*(4), 469-474.

Brock, J. E. (1946). A Note on the Damped Vibration Absorber. *Journal of Applied Mechanics, 13*(4), A284.

de Espíndola, J., Cruz, G., de Oliveira Lopes, E., & Bavastri , C. (2008). Design of Optimum Systems of Viscoelastic Vibration Absorbers for a Given Materail Based on the Fractional Calculus Model. *Journal of Vibration and Control, 14*(9-10), 1607-1630.

Den Hartog, J. (1940). *Mechanical Vibrations* (2nd ed.). London: McGraw-Hill.

Den Hartog, J. (1985). *Mechanical Vibrations* (4th ed.). Mineola, New York: Courier Dover Publications.

Doubrawa Filho, F., Luersen, M., & Bavastri, C. (2011). Optimal Deisgn of Viscoelastic Vibration Absorbers for Rotating Systems. *Journal of Vibration and Control, 17*(5), 699-710.

Febbo, M. (2012). Optimal Parameters and Characteristics of a Three Degree of Freedom Dynamic Vibration Absorber. *Journal of Vibration and Acoustics, 134*(2), 021010.

Febbo, M., & Vera, S. (2008). Optimization of a Two Degree of Freedom System Acting as a Dynamic Vibration Absorber. *Journal of Vibration and Acoustics, 130*(1), 011013.

Frahm, H. (1911). *United States Patent No. 989958A.*

Harik, R., & Issa, J. (2015). Design of a Vibration Absorber for Harmonically Forced Damped Systems. *Journal of Vibration and Control, 21*(9), 1810-1820.

Issa, J. (2011). Ground Motion Isolation Using a Newly Designed Vibration Absorber. *Journal of Mechanical Engineering Science, 226*, 636-647.

Issa, J. (2013). Optimal Design of a Damped Single Degree of Freedom Platform for Vibration Suppression in Harmonically Forced Undamped Systems. *Journal of Vibration and Acoustics, 135*(5), 051003.

Issa, J. (2014). Reduction of the Transient Vibration of Systems Using the Classical and Modified Vibration Absorber Setup. *Journal of Vibration and Control, 20*(10), 1475-1487.

Nishihara, O., & Asami, T. (2002). Closed-Form Solutions to the Exact Optimizations of Dynamic Vibration Absorbers (Minimizations of the Maximum Amplitude Magnification Factors). *Journal of Vibration and Acoustics, 124*(4), 576-582.

Ormondroyd, J., & Den Hartog, J. P. (1928). The Theory of the Dynamic Vibration Absorber. *Journal of Applied Mechanics, 50*, 9-22.

Oueini, S. S., & Nayfeh, A. H. (2000). Analysis and Application of a Nonlinear Vibration Absorber. *Journal of Vibration and Control, 6*(7), 999-1016.

Ozer, M., & Royston, T. J. (2005). Extending Den Hartog's Vibration Asborber Technique to Multi-Degree-of-Freedom Systems. *Journal of Vibration and Acoustics, 127*(4), 341-350.

Pennestri, E. (1998). An Application of Chebyshev's Min-Max Criterion to the Optimal Design of a Damped Dynamic Vibration Absorber. *Journal of Sound and Vibration, 217*(4), 757-765.

Randall, S. E., Halsted, D. M., & Taylor, D. L. (1981). Optimum Vibration Absorbers for a Linear Damped System. *Journal of Mechanical Design, 103*(4), 908-913.

Rao, S. S. (2003). *Mechanical Vibrations* (4th ed.). Upper Saddle River, New Jersey: Prentice-Hall.

Snowdon, J. (1959). Steady-State Behavior of the Dynamic Absorber. *Journal of the Acoustical Society of America, 31*(8), 1096-1103.

Soom, A., & Lee, M. (1983). Optimal Design of Linear and Nonlinear Vibration Absorbers for Damped Systems. *Journal of Vibration and Acoustics, 105*, 112-119.

Thompson, A. (1981). Optimum Tuning and Damping of a Dynamic Vibration Absorber Applied to a Force Excited and Damped Primary System. *Journal of Sound and Vibration, 77*(3), 403-415.

Appendix

$$b_0 = \lambda_2^4(\lambda_3 + 4\zeta_1\zeta_3\lambda_3^2 - 2\zeta_3^2(1 + 2\lambda_3) + \lambda_3(\lambda_3(3 + \lambda_3(3 + \lambda_3 - 2\zeta_1^2(2 + \lambda_3))) + (1 + \lambda_3)^3\mu_2) + \lambda_3(1 + \lambda_3)\mu_3)$$

$$b_1 = -\lambda_2^2(\lambda_2(2\mu_2(8\zeta_1\zeta_3\lambda_3^2 - 4\zeta_3^2(1 + 2\lambda_3) + 2\lambda_3(1 + \lambda_3(3 + \lambda_3(3 + \lambda_3 - 2\zeta_1^2(2 + \lambda_3)))) + \lambda_3(1 + \lambda_3)^3\mu_2) + \lambda_2(1 + \lambda_3)^2(8\zeta_3^2(-1 + 2\zeta_1^2 - \mu_2) + (1 + \mu_2)(1 - 8\zeta_1^2\lambda_3 + \mu_2 + \lambda_3(2 + \lambda_3)(1 + \mu_2)))) + 8\zeta_2^2(-4\zeta_1\zeta_3\lambda_3^2 + \zeta_3^2(2 + 4\lambda_3) + \lambda_3(-1 - \mu_2 + \lambda_3(2\zeta_1^2\lambda_3(2 + \lambda_3) - 3(1 + \mu_2) - \lambda_3(3 + \lambda_3)(1 + \mu_2)))) - 2(1 + \lambda_3)(4\zeta_2^2\lambda_3 - 2\lambda_2\lambda_3\mu_2 + \lambda_2^2(1 + \lambda_3)(-1 + 4\zeta_1^2\lambda_3 - \mu_2 - 2\lambda_3(1 + \mu_2)))\mu_3 + \lambda_2^2(1 + 2\lambda_3)\mu_3^2)$$

$$
\begin{aligned}
b_2 = & -12\zeta_2\lambda_2^2(1+\lambda_3)^2(\zeta_3+\zeta_1\lambda_3^2)\mu_2^2 + \lambda_2^2(-8(\zeta_1+\zeta_3)^2\lambda_2^2(1+(-2+4\zeta_1^2)\zeta_3^2 \\
& + \lambda_3(2-2\zeta_1^2+\lambda_3)) + 4\lambda_2(8\zeta_1\zeta_3^3\lambda_2 + 4\zeta_3^4\lambda_2 + 4\zeta_1^4\lambda_2\lambda_3 \\
& + (1+\lambda_3)^4 - 4\zeta_1^2(1+\lambda_3)^2(\lambda_2+2\lambda_3) + 8\zeta_1\zeta_3\lambda_2(-1+(-2+\zeta_1^2 \\
& - \lambda_3)\lambda_3) + 4\zeta_3^2(1+\lambda_3)(-(2+\lambda_2)(1+\lambda_3) + \zeta_1^2(4+\lambda_2 \\
& + 4\lambda_3)))\mu_2 - (-5\lambda_2 - 6\lambda_3 + 4\zeta_3^2(1+\lambda_2+(2+\lambda_2)\lambda_3)(3+2\lambda_2(1 \\
& + \lambda_3)) + 8\zeta_1\zeta_3(\lambda_2+\lambda_3+\lambda_2\lambda_3)(-3\lambda_3 + 2\lambda_2(1+\lambda_3)) + 4\zeta_1^2(\lambda_2 \\
& + (2+\lambda_2)\lambda_3 + \lambda_3^2)(3\lambda_3^2 + 2\lambda_2(1+\lambda_3)) + \lambda_3(-5\lambda_2(2+\lambda_3)(2 \\
& + \lambda_3(2+\lambda_3)) - 6\lambda_3(3+\lambda_3(3+\lambda_3))))\mu_2^2 + (1+\lambda_3)^3(\lambda_2+\lambda_3 \\
& + \lambda_2\lambda_3)\mu_2^3) + 16\zeta_2^4(\lambda_3 + 4\zeta_1\zeta_3\lambda_3^2 - 2\zeta_3^2(1+2\lambda_3) + \lambda_3(\lambda_3(3 \\
& + \lambda_3(3+\lambda_3-2\zeta_1^2(2+\lambda_3))) + (1+\lambda_3)^3\mu_2)) \\
& + 4\zeta_2^2\lambda_2(\mu_2(-16\zeta_1\zeta_3\lambda_3^2 + 8\zeta_3^2(1+2\lambda_3) + 4\lambda_3(-1+\lambda_3(-3 \\
& + \lambda_3(-3-\lambda_3+2\zeta_1^2(2+\lambda_3)))) - 3\lambda_3(1+\lambda_3)^3\mu_2) \\
& - 2\lambda_2(1+\lambda_3)^2(8\zeta_3^2(-1+2\zeta_1^2-\mu_2) + (1+\mu_2)(1-8\zeta_1^2\lambda_3+\mu_2 \\
& + \lambda_3(2+\lambda_3)(1+\mu_2)))) + \mu_3(16\zeta_2^4\lambda_3(1+\lambda_3) + 16\zeta_2^2\lambda_2(1 \\
& + \lambda_3)(-\lambda_3\mu_2 + \lambda_2(1+\lambda_3)(-1+4\zeta_1^2\lambda_3 - \mu_2 - 2\lambda_3(1+\mu_2))) \\
& + \lambda_2^2(6\lambda_3(1+\lambda_3)\mu_2^2 + \lambda_2(1+\lambda_3)^2\mu_2(8+5\mu_2+8\lambda_3(2-4\zeta_1^2 \\
& + \mu_2)) + 4\lambda_2^2(4\zeta_1^4\lambda_3 + 8\zeta_1^3\zeta_3\lambda_3 - 2\zeta_1\zeta_3(1+2\lambda_3)(1+\mu_2) + (1 \\
& + \mu_2)(-\zeta_3^2(3+4\lambda_3) + (1+\lambda_3)^3(1+\mu_2)) + \zeta_1^2(\zeta_3^2(4+8\lambda_3) - (4 \\
& + 5\lambda_3(2+\lambda_3))(1+\mu_2)))) + \lambda_2^2\mu_3(-8\zeta_2^2(1+2\lambda_3) + \lambda_2(4\mu_2 \\
& + 8\lambda_3\mu_2 + \lambda_2(-4\zeta_1\zeta_3 - 4\zeta_1^2(1+\lambda_3)(2+3\lambda_3) + (1+\lambda_3)(5 \\
& + 6\lambda_3)(1+\mu_2))) + \lambda_2^2\mu_3))
\end{aligned}
$$

$$
\begin{aligned}
b_3 = & -2(16\zeta_2^3(1+\lambda_3)^2(\zeta_3+\zeta_1\lambda_3^2)\mu_2^2 + 8\zeta_2\lambda_2\mu_2^2(2(\zeta_1+\zeta_3)\lambda_2(\zeta_3^2+\zeta_1^2\lambda_3^2 \\
& + \zeta_1\zeta_3(3+\lambda_3(4+3\lambda_3))) - (1+\lambda_3)^2(\zeta_3+\zeta_1\lambda_3^2)\mu_2) \\
& + \lambda_2(8(\zeta_1+\zeta_3)^4\lambda_2^3 + 16(\zeta_1+\zeta_3)^2\lambda_2^2(2\zeta_1\zeta_3\lambda_2 + \zeta_3^2(2-4\zeta_1^2+\lambda_2) \\
& - (1+\lambda_3)^2 + \zeta_1^2(\lambda_2+2\lambda_3))\mu_2 + \lambda_2(32\zeta_1\zeta_3^3\lambda_2(1+\lambda_2) + 8\zeta_3^4\lambda_2(2 \\
& + \lambda_2) + 3(1+\lambda_3)^4 + 8\zeta_1^4\lambda_2(\lambda_2+2\lambda_3) - 4\zeta_1^2(1+\lambda_3)^2(5\lambda_2+6\lambda_3) \\
& + 8\zeta_1\zeta_3\lambda_2(-5(1+\lambda_3)^2 + 4\zeta_1^2(\lambda_2+\lambda_3)) + 4\zeta_3^2(-(6 \\
& + 5\lambda_2)(1+\lambda_3)^2 + 4\zeta_1^2(3+\lambda_2+3\lambda_2^2+(6+\lambda_2)\lambda_3+3\lambda_3^2)))\mu_2^2 \\
& - 2(-\lambda_2-\lambda_3+4\zeta_1\zeta_3(-\lambda_3^2-\lambda_2\lambda_3(1+\lambda_3)+\lambda_2^2(1+\lambda_3)^2) \\
& + 2\zeta_1^2(\lambda_2^2(1+\lambda_3)^2+\lambda_3^3(2+\lambda_3)+\lambda_2\lambda_3(1+\lambda_3)(1+2\lambda_3)) \\
& + 2\zeta_3^2(1+2\lambda_3+\lambda_2(1+\lambda_3)(2+\lambda_2+\lambda_3+\lambda_2\lambda_3)) - \lambda_3(\lambda_2(2 \\
& + \lambda_3)(2+\lambda_3(2+\lambda_3)) + \lambda_3(3+\lambda_3(3+\lambda_3))))\mu_2^3) \\
& + 8\zeta_2^4(1+\lambda_3)^2(8\zeta_3^2(-1+2\zeta_1^2-\mu_2) + (1+\mu_2)(1-8\zeta_1^2\lambda_3+\mu_2 \\
& + \lambda_3(2+\lambda_3)(1+\mu_2))) + 4\zeta_2^2(-16\zeta_3^4\lambda_2^2(1+\mu_2) + 16\zeta_1^4\lambda_2^2(2\zeta_3^2 \\
& - \lambda_3(1+\mu_2)) + 32\zeta_1^3\zeta_3\lambda_2^2(2\zeta_3^2-\lambda_3(1+\mu_2)) - (1+\lambda_3)^3\mu_2(\lambda_3\mu_2 \\
& + \lambda_2(1+\lambda_3)(1+\mu_2)(2+\mu_2)) + 2\zeta_3^2((1+2\lambda_3)\mu_2^2 \\
& + 4\lambda_2^2(1+\lambda_3)^2(1+\mu_2)^2 + 2\lambda_2(1+\lambda_3)^2\mu_2(4+3\mu_2)) \\
& + 4\zeta_1\zeta_3(-\lambda_3^2\mu_2^2 + 4\lambda_2^2(1+\mu_2)(-2\zeta_3^2+(1+\lambda_3)^2(1+\mu_2))) \\
& + 2\zeta_1^2(\lambda_3^3(2+\lambda_3)\mu_2^2 + 4\lambda_2^2(4\zeta_3^4 - 2\zeta_3^2(1+\lambda_3)(1+\mu_2) \\
& + (1+\lambda_3)^2(1+\mu_2)^2) + 2\lambda_2(1+\lambda_3)^2\mu_2(-8\zeta_3^2+\lambda_3(4+3\mu_2)))) \\
& + \mu_3(2(-4\zeta_2\lambda_2^2(1+\lambda_3)(\zeta_3+\zeta_1\lambda_3(2+3\lambda_3))\mu_2^2 \\
& - 8\zeta_2^4(1+\lambda_3)^2(-1+4\zeta_1^2\lambda_3-\mu_2-2\lambda_3(1+\mu_2)) + 2\zeta_2^2(-\lambda_3(1 \\
& + \lambda_3)\mu_2^2 - \lambda_2(1+\lambda_3)^2\mu_2(4+3\mu_2+\lambda_3(8-16\zeta_1^2+6\mu_2)) \\
& + 4\lambda_2^2(-4\zeta_1^4\lambda_3 - 8\zeta_1^3\zeta_3\lambda_3 + 2\zeta_1\zeta_3(1+2\lambda_3)(1+\mu_2) - (1 \\
& + \mu_2)(-\zeta_3^2(3+4\lambda_3) + (1+\lambda_3)^3(1+\mu_2)) + \zeta_1^2(-4\zeta_3^2(1+2\lambda_3) \\
& + (4+5\lambda_3(2+\lambda_3))(1+\mu_2)))) + \lambda_2(8\zeta_1^4\lambda_2^2(\lambda_2+\lambda_2\mu_2+2\lambda_3\mu_2)
\end{aligned}
$$

$$+ 16\zeta_1^3\zeta_3\lambda_2^2(\lambda_2 + \lambda_2\mu_2 + 2\lambda_3\mu_2) - 4\zeta_1\zeta_3\lambda_2^2(2\lambda_2(1 + \lambda_3)(1 + \mu_2)^2$$

$$+ (1 + 2\lambda_3)\mu_2(2 + \mu_2)) - 2\zeta_3^2\lambda_2^2(2\lambda_2(1 + \lambda_3)(1 + \mu_2)^2 + (3$$

$$+ 4\lambda_3)\mu_2(2 + \mu_2)) + (1 + \lambda_3)\mu_2(\lambda_3\mu_2^2 + \lambda_2^2(1 + \lambda_3)^2(1 + \mu_2)(4$$

$$+ \mu_2) + \lambda_2(1 + \lambda_3)\mu_2(3 + \mu_2 + \lambda_3(6 + \mu_2)))$$

$$+ 2\zeta_1^2\lambda_2(-6\lambda_3(1 + \lambda_3)^2\mu_2^2 - 2\lambda_2^2(1 + \mu_2)(1 - 2\zeta_3^2 + \lambda_3 + \mu_2$$

$$+ \lambda_3\mu_2) - \lambda_2\mu_2(8 - 8\zeta_3^2(1 + 2\lambda_3) + 5\mu_2 + 2\lambda_3(2 + \lambda_3)(5$$

$$+ 3\mu_2))))) + \mu_3(8\zeta_2^4(1 + 2\lambda_3) + 4\zeta_2^2\lambda_2(-2(\mu_2 + 2\lambda_3\mu_2)$$

$$+ \lambda_2(4\zeta_1\zeta_3 + 4\zeta_1^2(1 + \lambda_3)(2 + 3\lambda_3) - (1 + \lambda_3)(5 + 6\lambda_3)(1 + \mu_2)))$$

$$+ \lambda_2^2(3(1 + 2\lambda_3)\mu_2^2 + 2\lambda_2\mu_2(-4\zeta_1\zeta_3 - 4\zeta_1^2(1 + \lambda_3)(2 + 3\lambda_3) + (1$$

$$+ \lambda_3)(5 + 6\lambda_3 + 3(1 + \lambda_3)\mu_2)) + \lambda_2^2(8\zeta_1^4 + 16\zeta_1^3\zeta_3 - 8\zeta_1\zeta_3(1$$

$$+ \mu_2) + (1 + \mu_2)(-4\zeta_3^2 + 3(1 + \lambda_3)^2(1 + \mu_2)) + 4\zeta_1^2(2\zeta_3^2 - (3$$

$$+ 2\lambda_3)(1 + \mu_2)))) + 2\lambda_2^2(-2\zeta_2^2 + \lambda_2(-\lambda_2(1 + \lambda_3)(-1 + 2\zeta_1^2 - \mu_2)$$

$$+ \mu_2))\mu_3)))$$

$$
\begin{aligned}
b_4 = {} & -128\zeta_1^2\zeta_2^4 - 256\zeta_1\zeta_2^4\zeta_3 - 128\zeta_2^4\zeta_3^2 + 256\zeta_1^2\zeta_2^4\zeta_3^2 - 512\zeta_1^4\zeta_2^4\zeta_3^2 \\
& + 512\zeta_1\zeta_2^4\zeta_3^3 - 1024\zeta_1^3\zeta_2^4\zeta_3^3 + 256\zeta_2^4\zeta_3^4 - 512\zeta_1^2\zeta_2^4\zeta_3^4 - 128\zeta_1^4\zeta_2^2\lambda_2^2 \\
& - 512\zeta_1^3\zeta_2^2\zeta_3\lambda_2^2 - 768\zeta_1^2\zeta_2^2\zeta_3^2\lambda_2^2 - 512\zeta_1\zeta_2^2\zeta_3^3\lambda_2^2 - 128\zeta_2^2\zeta_3^4\lambda_2^2 \\
& - 256\zeta_1^2\zeta_2^4\lambda_3 + 256\zeta_1^4\zeta_2^4\lambda_3 - 512\zeta_1\zeta_2^4\zeta_3\lambda_3 + 512\zeta_1^3\zeta_2^4\zeta_3\lambda_3 \\
& - 256\zeta_2^4\zeta_3^2\lambda_3 + 256\zeta_1^2\zeta_2^4\zeta_3^2\lambda_3 - 128\zeta_1^2\zeta_2^4\lambda_3^2 - 256\zeta_1\zeta_2^4\zeta_3\lambda_3^2 \\
& - 128\zeta_2^4\zeta_3^2\lambda_3^2 + 64(\zeta_1 + \zeta_3)^2((\zeta_1 + \zeta_3)^2\lambda_2^3 + 4\zeta_2^4(-1 + \zeta_3^2 + (-2 \\
& + \zeta_1^2 - \lambda_3)\lambda_3) + 2\zeta_2^2\lambda_2(-4\zeta_1\zeta_3\lambda_2 + \zeta_3^2(4\zeta_1^2 - 2(1 + \lambda_2)) \\
& + (1 + \lambda_3)^2 - 2\zeta_1^2(\lambda_2 + \lambda_3)))\mu_2 - 8(24\zeta_1\zeta_2\zeta_3(\zeta_1 + \zeta_3)^3\lambda_2^2 \\
& + 16\zeta_2^4(\zeta_1 + \zeta_3)^2(1 + \lambda_3)^2 + 8\zeta_2^3(\zeta_1 + \zeta_3)(\zeta_3(4\zeta_1 + \zeta_3) + 6\zeta_1\zeta_3\lambda_3 \\
& + \zeta_1(\zeta_1 + 4\zeta_3)\lambda_3^2) + 2(\zeta_1 + \zeta_3)^2\lambda_2^2(\zeta_3^2(-6 + 12\zeta_1^2 - 5\lambda_2) \\
& - 10\zeta_1\zeta_3\lambda_2 + 3(1 + \lambda_3)^2 - \zeta_1^2(5\lambda_2 + 6\lambda_3)) + \zeta_2^2(8\zeta_3^4\lambda_2(3 + 2\lambda_2) \\
& + 16\zeta_1\zeta_3^3\lambda_2(3 + 4\lambda_2) + (1 + \lambda_3)^4 - 8\zeta_1^2(1 + \lambda_3)^2(3\lambda_2 + \lambda_3) \\
& + 8\zeta_1^4\lambda_2(2\lambda_2 + 3\lambda_3) + 16\zeta_1\zeta_3\lambda_2(-3(1 + \lambda_3)^2 + \zeta_1^2(4\lambda_2 + 3\lambda_3)) \\
& + 8\zeta_3^2(-(1 + 3\lambda_2)(1 + \lambda_3)^2 + \zeta_1^2(12\lambda_2^2 + 3\lambda_2(1 + \lambda_3) \\
& + 2(1 + \lambda_3)^2))))\mu_2^2 + 4(8\zeta_2(\zeta_1 + \zeta_3)\lambda_2(\zeta_3(4\zeta_1 + \zeta_3) + 6\zeta_1\zeta_3\lambda_3 \\
& + \zeta_1(\zeta_1 + 4\zeta_3)\lambda_3^2) + \zeta_2^2(1 + \lambda_3)(-(1 + \lambda_3)^3 + 4\zeta_3^2(1 + 4\lambda_2(1 \\
& + \lambda_3)) + 8\zeta_1\zeta_3(-\lambda_3 + 4\lambda_2(1 + \lambda_3)) + 4\zeta_1^2(\lambda_3^2 + 4\lambda_2(1 + \lambda_3))) \\
& + \lambda_2(4\zeta_3^4\lambda_2(1 + \lambda_2) + 8\zeta_1\zeta_3^3\lambda_2(1 + 2\lambda_2) + (1 + \lambda_3)^4 + 4\zeta_1^4\lambda_2(\lambda_2 \\
& + \lambda_3) - 8\zeta_1^2(1 + \lambda_3)^2(\lambda_2 + \lambda_3) + 8\zeta_1\zeta_3\lambda_2(-2(1 + \lambda_3)^2 + \zeta_1^2(2\lambda_2 \\
& + \lambda_3)) + 4\zeta_3^2(-2(1 + \lambda_2)(1 + \lambda_3)^2 + \zeta_1^2(4 + \lambda_2 + 6\lambda_2^2 + (8 \\
& + \lambda_2)\lambda_3 + 4\lambda_3^2))))\mu_2^3 + (\lambda_2 + \lambda_3 - 2\zeta_2^2(1 + \lambda_3)^4 - 4\zeta_2(1 + \lambda_3)^2(\zeta_3 \\
& + \zeta_1\lambda_3^2) + 4\zeta_1\zeta_3\lambda_3(\lambda_3 + 2\lambda_2(1 + \lambda_3)) - 2\zeta_3^2(1 + 2\lambda_3 + 2\lambda_2(1 \\
& + \lambda_3)) + \lambda_3(\lambda_3(3 + \lambda_3(3 + \lambda_3 - 2\zeta_1^2(2 + \lambda_3))) + \lambda_2(4 + \lambda_3(6 \\
& - 4\zeta_1^2(1 + \lambda_3) + \lambda_3(4 + \lambda_3)))))\mu_2^4 + \mu_3(32\zeta_2^3(1 + \lambda_3)(\zeta_3 + \zeta_1\lambda_3(3 \\
& + 4\lambda_3))\mu_2^2 + 16\zeta_2\lambda_2\mu_2^2(6\zeta_1(\zeta_1 + \zeta_3)\lambda_2(\zeta_3 + \zeta_1\lambda_3 + 2\zeta_3\lambda_3) - (1
\end{aligned}
$$

$$+ \lambda_3)(\zeta_3 + \zeta_1\lambda_3(3 + 4\lambda_3))\mu_2) + \mu_2(64(\zeta_1 + \zeta_3)^2\lambda_2^3(-1 + 2\zeta_1^2$$

$$- \lambda_3) + 8\lambda_2^2(3(1 + \lambda_3)^3 + 2\zeta_1^4(5\lambda_2 + 6\lambda_3) + 4\zeta_1^3\zeta_3(5\lambda_2 + 6\lambda_3)$$

$$- 2\zeta_1\zeta_3(3 + 6\lambda_3 + 10\lambda_2(1 + \lambda_3)) - \zeta_3^2(9 + 12\lambda_3 + 10\lambda_2(1 + \lambda_3))$$

$$+ \zeta_1^2(-10\lambda_2(1 + \lambda_3) + 2\zeta_3^2(6 + 5\lambda_2 + 12\lambda_3) - 3(4 + 5\lambda_3(2$$

$$+ \lambda_3))))\mu_2 - 4\lambda_2(4(\zeta_1 + \zeta_3)^2\lambda_2^2(1 + \lambda_3) + 2(1 + \lambda_3)^2(-1 + (-2$$

$$+ 4\zeta_1^2)\lambda_3) + \lambda_2(-4(1 + \lambda_3)^3 + \zeta_1^2(2 + 3\lambda_3)(4 + 3\lambda_3) + \zeta_3^2(3$$

$$+ 4\lambda_3) + 2\zeta_1(\zeta_3 + 2\zeta_3\lambda_3)))\mu_2^2 + (1 + \lambda_3)(\lambda_2 + \lambda_3 + \lambda_2\lambda_3)\mu_2^3)$$

$$+ 64\zeta_2^4(4\zeta_1^4\lambda_3 + 8\zeta_1^3\zeta_3\lambda_3 - 2\zeta_1\zeta_3(1 + 2\lambda_3)(1 + \mu_2) + (1$$

$$+ \mu_2)(-\zeta_3^2(3 + 4\lambda_3) + (1 + \lambda_3)^3(1 + \mu_2)) + \zeta_1^2(\zeta_3^2(4 + 8\lambda_3) - (4$$

$$+ 5\lambda_3(2 + \lambda_3))(1 + \mu_2))) + 4\zeta_2^2(-64\zeta_1^4\lambda_2(\lambda_2 + (\lambda_2 + \lambda_3)\mu_2)$$

$$- 128\zeta_1^3\zeta_3\lambda_2(\lambda_2 + (\lambda_2 + \lambda_3)\mu_2) + (1 + \lambda_3)^2\mu_2(-8\lambda_2(1 + \lambda_3)(1$$

$$+ \mu_2)(2 + \mu_2) - \mu_2(4 + 8\lambda_3 + \mu_2)) + 8\zeta_1\zeta_3\lambda_2(8\lambda_2(1$$

$$+ \lambda_3)(1 + \mu_2)^2 + (1 + 2\lambda_3)\mu_2(4 + 3\mu_2)) + 4\zeta_3^2\lambda_2(8\lambda_2(1$$

$$+ \lambda_3)(1 + \mu_2)^2 + (3 + 4\lambda_3)\mu_2(4 + 3\mu_2)) + 4\zeta_1^2(4\lambda_3(1 + \lambda_3)^2\mu_2^2$$

$$+ 8\lambda_2^2(1 + \mu_2)(1 - 2\zeta_3^2 + \lambda_3 + \mu_2 + \lambda_3\mu_2) + \lambda_2\mu_2(-16\zeta_3^2(1 + 2\lambda_3)$$

$$+ (4 + 5\lambda_3(2 + \lambda_3))(4 + 3\mu_2)))) - (4\zeta_2\lambda_2^2(\zeta_3 + \zeta_1(5 + 2\lambda_3(11$$

$$+ 9\lambda_3)))\mu_2^2 + 16\zeta_2^4(4\zeta_1\zeta_3 + 4\zeta_1^2(1 + \lambda_3)(2 + 3\lambda_3) - (1 + \lambda_3)(5$$

$$+ 6\lambda_3)(1 + \mu_2)) + 4\zeta_2^2(2(1 + 2\lambda_3)\mu_2^2 + \lambda_2\mu_2(-16\zeta_1\zeta_3 - 16\zeta_1^2(1$$

$$+ \lambda_3)(2 + 3\lambda_3) + (1 + \lambda_3)(5 + 6\lambda_3)(4 + 3\mu_2)) + 4\lambda_2^2(8\zeta_1^4$$

$$+ 16\zeta_1^3\zeta_3 - 8\zeta_1\zeta_3(1 + \mu_2) + (1 + \mu_2)(-4\zeta_3^2 + 3(1 + \lambda_3)^2(1 + \mu_2))$$

$$+ 4\zeta_1^2(2\zeta_3^2 - (3 + 2\lambda_3)(1 + \mu_2)))) + \lambda_2(-64\zeta_1^4\lambda_2^2\mu_2$$

$$- 128\zeta_1^3\zeta_3\lambda_2^2\mu_2 + 8\zeta_3^2\lambda_2^2(\lambda_2(1 + \mu_2)^2 + 2\mu_2(2 + \mu_2))$$

$$+ 8\zeta_1\zeta_3\lambda_2(3\mu_2^2 + 2\lambda_2^2(1 + \mu_2)^2 + \lambda_2\mu_2(8 + 5\mu_2)) + 4\zeta_1^2\lambda_2(6(1$$

$$+ \lambda_3)(2 + 3\lambda_3)\mu_2^2 + 2\lambda_2^2(1 + \mu_2)^2 + \lambda_2\mu_2(24 - 16\zeta_3^2 + 16\lambda_3$$

$$+ 15\mu_2 + 9\lambda_3\mu_2)) + \mu_2(-4(1 + 2\lambda_3)\mu_2^2 - 6\lambda_2^2(1 + \lambda_3)^2(1 + \mu_2)(4$$

$$+ \mu_2) - 3\lambda_2(1 + \lambda_3)\mu_2(10 + 3\mu_2 + 2\lambda_3(6 + \mu_2)))))\mu_3 + (16\zeta_2^4$$

$$+ 16\zeta_2^2\lambda_2(2\lambda_2(1 + \lambda_3)(-1 + 2\zeta_1^2 - \mu_2) - \mu_2) + \lambda_2^2(6\mu_2^2 + 4\lambda_2^2(1$$

$$+ \mu_2)(1 - \zeta_1^2 + \lambda_3 + \mu_2 + \lambda_3\mu_2) + \lambda_2\mu_2(16 - 32\zeta_1^2(1 + \lambda_3) + 9\mu_2$$

$$+ 8\lambda_3(2 + \mu_2))))\mu_3^2 + \lambda_2^4(1 - 2\zeta_1^2 + \mu_2)\mu_3^3)$$

$$
\begin{aligned}
b_5 = & -256\zeta_2^4(\zeta_1+\zeta_3)^4 - 256\zeta_2^2(\zeta_1+\zeta_3)^4(2\zeta_2^2-\lambda_2)\mu_2 \\
& - 32(\zeta_1+\zeta_3)^2(16\zeta_1\zeta_2^3\zeta_3(\zeta_1+\zeta_3) + 8\zeta_2^4(\zeta_1+\zeta_3)^2 + 3(\zeta_1+\zeta_3)^2\lambda_2^2 \\
& + 2\zeta_2^2(\zeta_3^2(-2+4\zeta_1^2-6\lambda_2) - 12\zeta_1\zeta_3\lambda_2 + (1+\lambda_3)^2 - 2\zeta_1^2(3\lambda_2 \\
& + \lambda_3)))\mu_2^2 + 32(\zeta_1+\zeta_3)^2(8\zeta_1\zeta_2\zeta_3(\zeta_1+\zeta_3)\lambda_2 + \zeta_2^2(4(\zeta_1+\zeta_3)^2\lambda_2 \\
& - (1+\lambda_3)^2) + \lambda_2(-4\zeta_1\zeta_3\lambda_2 + \zeta_3^2(4\zeta_1^2 - 2(1+\lambda_2)) + (1+\lambda_3)^2 \\
& - 2\zeta_1^2(\lambda_2+\lambda_3)))\mu_2^3 - (1+\lambda_3)^2(8\zeta_3^2(-1+2\zeta_2^2-\lambda_2) \\
& + 16\zeta_1\zeta_3(2\zeta_2(\zeta_2+\zeta_3)-\lambda_2) + 8\zeta_1^2(2(\zeta_2+\zeta_3)^2-\lambda_2-\lambda_3) \\
& + (1+\lambda_3)^2)\mu_2^4 + \mu_3(-256\zeta_2^4(\zeta_1+\zeta_3)^2(-1+2\zeta_1^2-\lambda_3) \\
& - 256\zeta_2^2(\zeta_1+\zeta_3)^2(2\zeta_2^2(-1+\zeta_1^2-\lambda_3) + \lambda_2(1-2\zeta_1^2+\lambda_3))\mu_2 \\
& + 32(8\zeta_2^4(\zeta_1+\zeta_3)^2(1+\lambda_3) + 3(\zeta_1+\zeta_3)^2\lambda_2^2(1-2\zeta_1^2+\lambda_3) \\
& + 8\zeta_1\zeta_2^3(\zeta_1+\zeta_3)(\zeta_3+\zeta_1\lambda_3+2\zeta_3\lambda_3) + \zeta_2^2((1+\lambda_3)^3 + 4\zeta_1^4(3\lambda_2 \\
& + \lambda_3) + 8\zeta_1^3\zeta_3(3\lambda_2+\lambda_3) - 2\zeta_1\zeta_3(1+2\lambda_3+12\lambda_2(1+\lambda_3)) - \zeta_3^2(3 \\
& + 4\lambda_3 + 12\lambda_2(1+\lambda_3)) + \zeta_1^2(-4-12\lambda_2(1+\lambda_3) - 5\lambda_3(2+\lambda_3) \\
& + 4\zeta_3^2(1+3\lambda_2+2\lambda_3))))\mu_2^2 - 16(8\zeta_1\zeta_2(\zeta_1+\zeta_3)\lambda_2(\zeta_3+\zeta_1\lambda_3 \\
& + 2\zeta_3\lambda_3) + \zeta_2^2(1+\lambda_3)(16\zeta_1\zeta_3\lambda_2 + 8\zeta_3^2\lambda_2 - (1+\lambda_3)^2 + 2\zeta_1^2(1 \\
& + 4\lambda_2+\lambda_3)) + \lambda_2((1+\lambda_3)^3 + 4\zeta_1^4(\lambda_2+\lambda_3) + 8\zeta_1^3\zeta_3(\lambda_2+\lambda_3) \\
& - 2\zeta_1\zeta_3(1+2\lambda_3+4\lambda_2(1+\lambda_3)) - \zeta_3^2(3+4\lambda_3+4\lambda_2(1+\lambda_3)) \\
& + \zeta_1^2(-4-4\lambda_2(1+\lambda_3) - 5\lambda_3(2+\lambda_3) + 4\zeta_3^2(1+\lambda_2+2\lambda_3))))\mu_2^3 \\
& + 2(1+\lambda_3)^2(-1+4\zeta_2^2-2\lambda_2+4\zeta_1^2\lambda_2 + 2(-1+2(\zeta_1+\zeta_2)^2 \\
& - \lambda_2)\lambda_3)\mu_2^4 - (64\zeta_1\zeta_2^3(1+\lambda_3)(1+3\lambda_3)\mu_2^2 + 32\zeta_1\zeta_2\lambda_2\mu_2^2((\zeta_1 \\
& + \zeta_3)(2\zeta_1+3\zeta_3)\lambda_2 - (1+\lambda_3)(1+3\lambda_3)\mu_2) + 32\zeta_2^4(8\zeta_1^4 + 16\zeta_1^3\zeta_3 \\
& - 8\zeta_1\zeta_3(1+\mu_2) + (1+\mu_2)(-4\zeta_3^2 + 3(1+\lambda_3)^2(1+\mu_2)) \\
& + 4\zeta_1^2(2\zeta_3^2 - (3+2\lambda_3)(1+\mu_2))) + \mu_2(96\zeta_1^4\lambda_2^2\mu_2 + 192\zeta_1^3\zeta_3\lambda_2^2\mu_2 \\
& - 16\zeta_1\zeta_3\lambda_2(\mu_2^2 + 2\lambda_2\mu_2(3+\mu_2) + \lambda_2^2(1+\mu_2)(4+\mu_2)) \\
& - 8\zeta_3^2\lambda_2^2(\lambda_2(1+\mu_2)(4+\mu_2) + \mu_2(6+\mu_2)) + \mu_2((1+2\lambda_3)\mu_2^2
\end{aligned}
$$

$$+ 2\lambda_2(1+\lambda_3)\mu_2(10+12\lambda_3+\mu_2) + 12\lambda_2^2(1+\lambda_3)^2(3+2\mu_2))$$

$$+ 8\zeta_1^2\lambda_2(-2(1+\lambda_3)(2+3\lambda_3)\mu_2^2 - \lambda_2^2(1+\mu_2)(4+\mu_2) - 3\lambda_2\mu_2(6$$

$$- 4\zeta_3^2 + 4\lambda_3 + 2\mu_2 + \lambda_3\mu_2))) + 8\zeta_2^2(-32\zeta_1^4\lambda_2\mu_2 - 64\zeta_1^3\zeta_3\lambda_2\mu_2$$

$$- (1+\lambda_3)\mu_2(6\lambda_2(1+\lambda_3)(1+\mu_2)(2+\mu_2) + \mu_2(5+6\lambda_3+\mu_2))$$

$$+ 4\zeta_3^2\lambda_2(2\lambda_2(1+\mu_2)^2 + \mu_2(4+3\mu_2)) + 4\zeta_1\zeta_3(\mu_2^2 + 4\lambda_2^2(1+\mu_2)^2$$

$$+ 2\lambda_2\mu_2(4+3\mu_2)) + 4\zeta_1^2((1+\lambda_3)(2+3\lambda_3)\mu_2^2 + 2\lambda_2^2(1+\mu_2)^2$$

$$+ \lambda_2\mu_2(-8\zeta_3^2 + (3+2\lambda_3)(4+3\mu_2)))))\mu_3 + 2(32\zeta_2^4(1+\lambda_3)(-1$$

$$+ 2\zeta_1^2 - \mu_2) + 8\zeta_1\zeta_2\lambda_2^2(2+3\lambda_3)\mu_2^2 + 4\zeta_2^2(-2\lambda_2(1+\lambda_3)(-4+8\zeta_1^2$$

$$- 3\mu_2)\mu_2 + \mu_2^2 + 4\lambda_2^2(1+\mu_2)(1-\zeta_1^2+\lambda_3+\mu_2+\lambda_3\mu_2))$$

$$+ \lambda_2\mu_2(-2\mu_2^2 + 2\lambda_2^2(2\zeta_1^2(2+\mu_2) - (1+\lambda_3)(1+\mu_2)(4+\mu_2))$$

$$+ \lambda_2\mu_2(24\zeta_1^2(1+\lambda_3) - 3(4+\mu_2) - 2\lambda_3(6+\mu_2))))\mu_3^2 - \lambda_2^2(\lambda_2^2$$

$$+ 8\zeta_2^2(-1+2\zeta_1^2-\mu_2) + \lambda_2\mu_2(-8\zeta_1^2 + (2+\lambda_2)(2+\mu_2)))\mu_3^3)$$

$$
\begin{aligned}
b_6 = {} & 8(\zeta_1+\zeta_3)^2\mu_2^2(-16\zeta_2^2(\zeta_1+\zeta_3)^2 - 8(\zeta_1+\zeta_3)^2(\zeta_2^2-\lambda_2)\mu_2 - (\zeta_3^2(-2+4\zeta_2^2 \\
& -2\lambda_2) + 4\zeta_1\zeta_3(2\zeta_2(\zeta_2+\zeta_3)-\lambda_2) + (1+\lambda_3)^2 + \zeta_1^2(4(\zeta_2+\zeta_3)^2 \\
& -2(\lambda_2+\lambda_3)))\mu_2^2) + \mu_3(4\mu_2^2(-32\zeta_2^2(\zeta_1+\zeta_3)^2(-1+2\zeta_1^2-\lambda_3) \\
& -16(\zeta_1+\zeta_3)^2(\zeta_2^2(-1+\zeta_1^2-\lambda_3)+\lambda_2(1-2\zeta_1^2+\lambda_3))\mu_2 \\
& +((1+\lambda_3)^3 + 4\zeta_1^4(\lambda_2+\lambda_3) + \zeta_3^2(-3-4\lambda_2-4(1+\lambda_2)\lambda_3 \\
& +8\zeta_2^2(1+\lambda_3)) + 8\zeta_1^3(\zeta_2\lambda_3+\zeta_3(\lambda_2+\lambda_3)) + 2\zeta_1\zeta_3(-1-2\lambda_3 \\
& +8\zeta_2^2(1+\lambda_3) - 4\lambda_2(1+\lambda_3) + 4\zeta_2(\zeta_3+2\zeta_3\lambda_3)) + \zeta_1^2(4(-1 \\
& +\zeta_3^2)(1+\lambda_2) + 2(-5+4\zeta_3^2-2\lambda_2)\lambda_3 - 5\lambda_3^2 + 8\zeta_2^2(1+\lambda_3) \\
& +8\zeta_2(\zeta_3+3\zeta_3\lambda_3)))\mu_2^2) + \mu_3(-128\zeta_2^4(\zeta_1+\zeta_3)^2 \\
& -128\zeta_2^2(\zeta_1+\zeta_3)^2(2\zeta_2^2-\lambda_2)\mu_2 - 16(8\zeta_2^4(\zeta_1+\zeta_3)^2 + 4\zeta_1\zeta_2^3(\zeta_1 \\
& +\zeta_3)(3\zeta_1+4\zeta_3) + 3(\zeta_1+\zeta_3)^2\lambda_2^2 + \zeta_2^2(8\zeta_1^4 + 16\zeta_1^3\zeta_3 - 4\zeta_3^2(1 \\
& +3\lambda_2) - 8\zeta_1(\zeta_3+3\zeta_3\lambda_2) + 4\zeta_1^2(-3+2\zeta_3^2-3\lambda_2-2\lambda_3) \\
& +3(1+\lambda_3)^2))\mu_2^2 + 8(4\zeta_1\zeta_2(\zeta_1+\zeta_3)(3\zeta_1+4\zeta_3)\lambda_2 + \lambda_2(8\zeta_1^4 \\
& +16\zeta_1^3\zeta_3 - 8\zeta_1\zeta_3(1+\lambda_2) - 4\zeta_3^2(1+\lambda_2) + 4\zeta_1^2(-3+2\zeta_3^2-\lambda_2 \\
& -2\lambda_3) + 3(1+\lambda_3)^2) + \zeta_2^2(8\zeta_3^2\lambda_2 + 4\zeta_1(\zeta_3+4\zeta_3\lambda_2) - 3(1+\lambda_3)^2 \\
& +2\zeta_1^2(3+4\lambda_2+\lambda_3)))\mu_2^3 - (-4\zeta_2\zeta_3 + 12\zeta_2^2(1+\lambda_3)^2 - (1+\lambda_3)(5 \\
& +6\lambda_2+6(1+\lambda_2)\lambda_3) + 4\zeta_1^2(\lambda_2(3+\lambda_3)+(1+\lambda_3)(2+3\lambda_3)) \\
& +4\zeta_1(\zeta_3+2\zeta_3\lambda_2+\zeta_2(3+2\lambda_3(5+3\lambda_3))))\mu_2^4 + \mu_3(32\zeta_1\zeta_2^3(3 \\
& +4\lambda_3)\mu_2^2 - 16\zeta_1\zeta_2\lambda_2(3+4\lambda_3)\mu_2^3 + 64\zeta_2^4(1+\mu_2)(1-\zeta_1^2+\lambda_3 \\
& +\mu_2+\lambda_3\mu_2) + \mu_2^2(24\lambda_2^2(1-\zeta_1^2+\lambda_3) - 4\lambda_2(-4(1+\lambda_2)(1+\lambda_3) \\
& +\zeta_1^2(8+\lambda_2+8\lambda_3))\mu_2 + (1+\lambda_2)\mu_2^2) + 4\zeta_2^2\mu_2(8(-1+2\zeta_1^2)(1 \\
& +\lambda_3)\mu_2 - \mu_2^2 - 8\lambda_2(1+\lambda_3)(1+\mu_2)(2+\mu_2) + 4\zeta_1^2\lambda_2(4+3\mu_2)) \\
& +(-12\zeta_1\zeta_2\lambda_2^2\mu_2^2 + 16\zeta_2^4(1-2\zeta_1^2+\mu_2) + \lambda_2^2\mu_2(\lambda_2(1+\mu_2)(4+\mu_2) \\
& +\mu_2(6-12\zeta_1^2+\mu_2)) - 4\zeta_2^2\lambda_2(2\lambda_2(1+\mu_2)^2 + \mu_2(4-8\zeta_1^2 \\
& +3\mu_2)))\mu_3)))
\end{aligned}
$$

$$b_7 = -2(8(\zeta_1+\zeta_3)^4\mu_2^4 + 8(\zeta_1+\zeta_3)^2(-1+2\zeta_1^2-\lambda_3)\mu_2^4\mu_3 + \mu_2^2(32\zeta_2^2(\zeta_1+\zeta_3)^2$$
$$+ 16(\zeta_1+\zeta_3)^2(\zeta_2^2-\lambda_2)\mu_2 + (8\zeta_1^4 + 16\zeta_1^3(\zeta_2+\zeta_3) + \zeta_3^2(-4+8\zeta_2^2$$
$$- 4\lambda_2) + 8\zeta_1\zeta_3(-1+2\zeta_2(\zeta_2+\zeta_3)-\lambda_2) + 4\zeta_1^2(-3+2(\zeta_2^2+4\zeta_2\zeta_3$$
$$+ \zeta_3^2) - \lambda_2 - 2\lambda_3) + 3(1+\lambda_3)^2)\mu_2^2)\mu_3^2 + 2\mu_2^2(8\zeta_2^2(-1+\zeta_1^2-\lambda_3)$$
$$- 4(\lambda_2(-1+\zeta_1^2-\lambda_3) + \zeta_2^2(1+\lambda_3))\mu_2 - (-1+2(\zeta_1+\zeta_2)^2$$
$$- \lambda_2)(1+\lambda_3)\mu_2^2)\mu_3^3 + (8\zeta_2^4 + 8\zeta_2^2(2\zeta_2^2-\lambda_2)\mu_2 + (4\zeta_2^2(-1$$
$$+ 2(\zeta_1+\zeta_2)^2) - 12\zeta_2^2\lambda_2 + 3\lambda_2^2)\mu_2^2 + 2\lambda_2(1-2(\zeta_1+\zeta_2)^2$$
$$+ \lambda_2)\mu_2^3)\mu_3^4)$$

$$b_8 = -\mu_2^2\mu_3^2(8(\zeta_1+\zeta_3)^2\mu_2^2 + 4(-1+\zeta_1^2-\lambda_3)\mu_2^2\mu_3 + (8\zeta_2^2 + 4(\zeta_2^2-\lambda_2)\mu_2$$
$$+ (-1+2(\zeta_1+\zeta_2)^2-\lambda_2)\mu_2^2)\mu_3^2)$$

$$b_9 = -\mu_2^4\mu_3^4$$